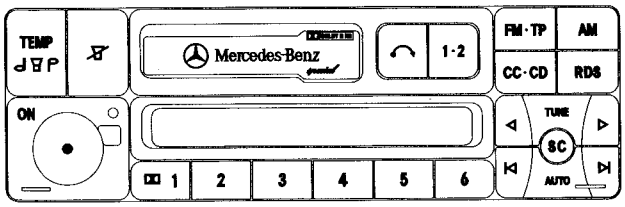

BECKER
AUTOMOTIVE SYSTEMS

SPECIAL 1388 / 1689

Technische Information

INHALTSANGABE

	Seite
Technische Daten	1-2
Anschlußanweisung	3
Abgleichanweisung	3
Kurzbezeichnungen	4-5
Schaltbild und Schaltungsplatte..E 4090 (AM)	6
Schaltungsplatte ..E 4010 (Main board)	7
Schaltungsplatte ..E9090 (Front)	8
Schaltbild ..E9090 (Front)	9-10
Schaltbild ..E 4010 (Main board)	11-14
Schaltbild und Schaltungsplatte ..E4020 (NF), ..E 4070 (FM)	15-17
Bedienaufsatz	18
Ersatzteilliste	19-26

CONTENTS

	Page
Technical Data	1-2
Connection instructions	3
Alignment instructions	3
Abbreviations	4-5
Circuit diagram and P.C. board ..E 4090 (AM)	6
P.C. board ..E 4010 (Main board)	7
P.C. board ..E 9090 (front)	8
Circuit diagram ..E 9090 (front)	9-10
Circuit diagram ..E 4010 (Main board)	11-14
Circuit diagram and P.C. board ..E 4020 (AF), ..E 4070 (FM)	15-17
Operation escutcheon	18
Spare parts list	19-26

Technische Daten

Wellenbereiche

MW		531 kHz -	1620 kHz
LW		150 kHz -	282 kHz
KW	49m Band	5900 kHz -	6250 kHz
UKW		87,5 MHz -	108,0 MHz
UKW	(TP)	87,5 MHz -	108,0 MHz

Sendereinstellung
Automatischer Sendersuchlauf, Programmsuchlauf, Scan-Funktion, Stationstasten 6 x UKW (Fixbetrieb), 6 x TP (Verkehrsfunk), 6 x RDS, 6 x KW, 6 x LW, 6 x MW,
Handabstimmung: UKW 100 kHz, MW 9 kHz, KW 5 kHz, LW 3 kHz

Autostore
- bei FM (Fix) 6 Stationsspeicher

Senderidentifizierung
Anzeige der RDS-Senderkürzel (PS-Code) oderFrequenzanzeige im Display,Verkehrsfunkkennung (TP) und Verkehrsdurchsage-kennung (TA). Regionalisierung bei bestimmten Senderketten möglich.

Abstimmung
Kapazitätsdioden mit prozessorgesteuertem Frequenzsynthesizer

Anzahl der Kreise
AM : 9 abstimmbare Kreise, 1 fester Kreis
FM : 4 abstimmbare Kreise, 1 fester Kreis

Zwischenrequenz
AM 455kHz, UKW 10,7 MHz

Schwundregelung (AM)

UKW-AGC
PIN-Diodennetzwerk und Regelverstärker im UK-Teil

Stereo-Decoder
Schalterdecoder mit feldstärkeabhängigem kontinuierlichem Stereo/ Monoübergang und 57 kHz-Unterdrückung, EIC integriert, HCC (High-Cut-Control)

Technical Data

Wave bands

AM		531 kHz -	1620 kHz
LW		150 kHz -	282 kHz
SW	49m band	5900 kHz -	6250 kHz
FM		87,5 MHz -	108,0 MHz
FM (TP)		87,5 MHz -	108,0 MHz

Station setting
Automatic station search,Automatic program tuning, Scan tuning, Station recall keys: 6 x FM (fix-mode), 6 x TP, 6 x RDS, 6 x AM, 6 x LW, 6 x SW,
Manual tuning: FM 100 kHz, AM 9 kHz, SW 5 kHz, LW 3 kHz steps

Autostore
- 6 stations for FM (fix-mode)

Station identification
Display of RDS-station name (PS-code)or frequency, traffic program (TP) and traffic announcment (TA). Regionalization possible at certain stations.

Tuning
Tuning diodes with processor-controlled frequency synthesizer

Number of circuits
AM : 9 variable circuits, 1 circuit fixed
FM: 4 variable circuits, 1 circuit fixed

Intermediate frequency
AM 455 kHz. FM 10.7 MHz

Fading control (AM)

FM-AGC
Pin diode network and AGC-amplifier in FM-part

Stereo decoder
Switch decoder with continuous mono-/stereo change-over, dependent on field intensity, 57 kHz suppression, EIC integreted, HCC (High-Cut-Control)

Änderungen vorbehalten / Modifications reserved

Copyright by Becker GmbH, Karlsbad

Qualitätsbewertung
Feldstärkeabhängiges Mono-Blend, Multipathabhängiges Mono-Blend, HCC (High-Cut-Control), Analoge Qualitätsspannung

Klangeinstellung
Höhen, Bässe getrennt einstellbar für jede Betriebsart und Wellenbereich. Einstellbar nach Aufrufen der Klang-Taste, Wertanzeige im Display.

Klang-Speicher

Loudness
Physiologische Lautstärkeregelung, automatisch.

Balance, Fader
Einstellbar nach Aufrufen der Klangfunktion, Wertanzeige im Display

Verkehrsfunk
Auswertung über RDS ,
Verkehrsfunk abschaltbar,
Durchsagekennung
TP-Anzeige im Display,
Verkehrsfunksuchlauf nach Aktivierung mit TP-Taste,
Last Function Memory

Diebstahlschutz
5-stelliger Festcode, Anti-Theft-LED (abschaltbar)

Telefonstummschaltung

Betriebsartwahl
Über CC·CD-Taste und Rundfunktasten

Cassettenteil, siehe getrennte Technische Information

Allgemeine Daten

Außentemperaturanzeige(bei angeschlossenem Außentemperaturfühler)
Anzeigebereich zwischen -20°C und +50°C

Betriebsspannung
24 V

Betriebsspannung intern
5 V stabilisiert
8,5 V stabilisiert

Ausgangsleistung
2 x 15W (an 4 Ohm)

Stromaufnahme
< 8,5 mA bei ausgeschaltetem System (nur an Kl. 30)
ca. 210 mA Radio aus (an Kl. 30 und 15)
ca. 350 mA bei Rundfunk-Leerlauf

Abmessungen
Einblock-Gerät nach DIN ISO 7736
B x H x T: 182 x 52 x 162 mm

Gewicht
1,6 kg

Quality evaluation
Field-strenht dep. Mono-Blend, Multipath dependent Mono-Blend, HCC High-Cut-Control, Analog quality voltage

Tone control
Treble and bass separately adjustable for each operation mode and each wave band. Adjustable after having pressed the tone control key, value indication at the display.

Tone memory

Loudness
Physiological volume control, automaticly.

Balance, fader
Adjustable after having pressed the tone control key, value indication at the display.

Traffic radio part
Evaluation with RDS,
Traffic information switchable,
Information code,
TP is displayed,
Traffic radio station search after activating with the "TP"- key,
Last function memory

Antitheft system
5-digit fixed Code, Anti-Theft-LED (switchable)

Muting during Car Telephone Calls

Mode Selection
Press the key CC·CD and radio keys

For tape deck see separate technical information

General Data

Outdoor temperature display (if pyrometer probe is connected)
Display range is between -20°C and +50°C

Operating voltage
24 V

Operating voltage internal
5 V stabilized
8.5 V stabilized

Output power
2 x 15 W (at 4 ohm)

Current consumption
< 8.5 mA when system is switched off (only at terminal 30)
approx. 210 mA radio off (at terminal 30 and 15)
approx. 350 m A radio without modulation

Dimensions
One-part radio according to DIN ISO 7736
Width x Height x Depth: 182 x 52 x 162 mm

Weight
1.6 kg

Anschlußanweisung

Kammer (A)

-1 Temperaturfühler Masseanschluß
-2 Temperaturfühler
-3 Telefon-Stummschaltung
-4 Dauerplus (Klemme 30)
-5 Steuerausgang für Automatikantenne (+24V)
-6 Klemme 30i
-7 Geschaltetes Plus (Klemme15)
-8 Masse (Klemme 31)

Kammer (B)

-1 nicht belegt
-2 nicht belegt
-3 Lautsprecher vorne rechts +
-4 Lautsprecher vorne rechts -
-5 Lautsprecher vorne links +
-6 Lautsprecher vorne links -
-7 nicht belegt
-8 nicht belegt

Kammer (C)

-1 NF-CDW rechts
-2 NF-CDW links
-3 NF-CDW Masse
-4 CDW 12V
-5 CDW Steuerung
-6 CDW Masse
-7 CDW BUS

Antennenbuchse (D)

Sicherung (E)

Connection instructions

Connection (A)

-1 Chassis connection pyrometer probe
-2 Pyrometer probe
-3 Muting during car telephone calls
-4 Permanent plus (terminal 30)
-5 Control output for automatic antenna (+24V)
-6 Terminal 30i
-7 Switched plus (terminal 15)
-8 Chassis (terminal 31)

Connection (B)

-1 not seized
-2 not seized
-3 Loudspeaker front right +
-4 Loudspeaker front right -
-5 Loudspeaker front left +
-6 Loudspeaker front left -
-7 not seized
-8 not seized

Connection (C)

-1 CD-AF right
-2 CD-AF left
-3 CD-AF Ground
-4 12V CD
-5 CD -Control
-6 CD Ground
-7 CD BUS

Antenna socket (D)

Fuse (E)

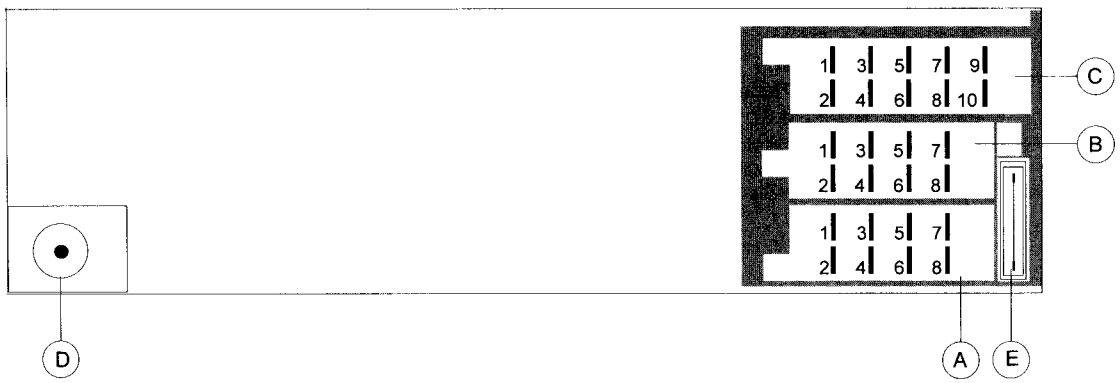

Abgleichanweisung

Der Abgleich wird in einer getrennten Abgleichanweisung beschrieben und kann unter der Bezeichnung "Abgleichanweisung 1150-253 und 1350-254" (gültig für alle MB Gerätetypen Modelljahr 94) über unseren Zentralkundendienst bezogen werden.

Alignment instructions

The alignment is described in the separate alignment instructions, that can be ordered under "Alignment instructions 1150-253 and 1350-254" (valid for all Mercedes Benz car radios model jear 94) in our Central Service Department.

Kurzbezeichnungen		Abbreviations
AMABS	**AM-AB**Stimmung	AM Tuning
AMANT	**AM-ANT**enne	AM Antenna
AMFST	**AM**-Feld**ST**ärke zur Steuerung	AM Field-Strength to control
AMFES	**AM**-Feld**ST**ärke vom Tuner	AM Field-Strength to from tuner
AMMAS	**AM MA**sse	AM Ground
AMKWS	**AM KW S**pulensatz	AM SW coil set
AMLWS	**AM LW S**pulensatz	AM LW coil set
AMMWS	**AM MW S**pulensatz	AM coil set
AMSTO	**AM-STO**p vom Tuner	AM stop from tuner
AUTOM	12V Steuerausgang**AUTOM**atikantenne	12V control output automatic antenna
AMOSZ	**AM OSZ**illator	AM oscilator
ANDET	**AN**oden**DET**ektor - Cassettenteil	Anode detector tape deck
AUTAN	Steuerleitung**AUT**omatik**AN**tenne	Control line automatic antenna
BELLE	**BEL**eutung**E**in	Illumination ON
BFPWM	**B**eleuchtung **F**ront**PWM**	Illumination Front PWM
CAMOT	**CA**ssetten**MOT**or	Cassette motor
CASDO	**CAS**sette**DO**wn	CASsette DOwn
CASIN	**CAS**sette**IN**=Einzug	Cassette retraction
CDCCL	CD-Clock =CDCLK	CD-clock
CDCLK	**CD-CL**oc**K**	CD-clock
CDCRE	**CDCRE** = CD-RESet	CD reset
CDDAT	**CD-DAT**en (bidirektional)	CD-Data (bidirectional)
CDONQ	**CD**W - **ON**. **Q**=LOW-aktiv	CD on low activ
CDOUT	serielle Daten**CD**W-**OUT**	serial Data CD-OUT
CDRES	**CD-RES**et	CD reset
CDWIN	serielle Daten**CDW-IN**	serial Data CD-IN
CDWON	**CD-W**echsler**ON**.	CD on
CLOK1	**CLO**c**K** für Datenbus **1**	Clock for Databus 1
CLOK2	**CLO**c**K** für Datenbus **2**	Clock for Databus 2
CLOKS	**CLO**c**K S**	Clock-S
CLOKS	**CLO**c**K S**teuerung	ClocK Control
CODE1	**CODE1** = Anschluß zur Codierung	Connector for Coding
DATA1	**DAT**enbus**1**	Data bus 1
DATA2	**DAT**enbus**2**	Data bus 2
DATAF	serielle**DAT**en-**F**ront	serial Data Front
DATAS	serielle**DAT**en**S**teuerung	serial Data Control
DURKE	**DUR**chsage**KE**nnung VF	traffic announcment (VF)
ENDMU	**END**stufen-**MU**te	Amplifier Mute
EJECT	CC-Ausschub	CC-ejection
ESDMA	**ESD-MA**sse	EDS-ground
FMABS	**FM ABS**timmspannung	FM tuning voltage
FM1AN	**FM** Empfänger 1 **AN**tennensignal	FM receiver 1 antenna signal
FM2AN	**FM** Empfänger 2 **AN**tennensignal	FM receiver 2 antenna signal
FMMAS	**FM MAS**se	FM-ground
FM1FS	**FM** Empf.**1**, Feld**S**tärke	FM receiver 1, Field-Strength
FM2FS	**FM** Empf.**2**, Feld**S**tärke	FM receiver 2, Field-Strength
FM1HR	**FM** Empfänger **1 H**F-**R**egelung	FM receiver RF-control
FM1MP	**FM** Empf.**1**, **M**ulti**P**ath-Signal	FM receiver 1,Multipath
FM1QA	**FM** Qualitätssign.**A**uswertung	FM Quality Signal evaluation
FM1QU	**FM** Empf.1, **QU**alitäts-Signal	FM receiver 1, Quality-Signal
FM2QU	**FM** Empf.2, **QU**alitäts-Signal	FM receiver 2, Quality-Signal
FMSUL	**FM SU**ch**L**auf	FM-Seek
FMOSZ	**FM OSZ**illatorfrequenz	FM-Oscillator frequency
FRCLK	**FR**ont-**CL**oc**K**	FRont-CLocK
FRENA	**FR**ont-**ENA**ble	FRont-ENAble
FRGND	**FR**ont **G**rou**ND** (Masse)	FRont GrouND
FRINT	**FR**ont**INT**errupt	FRont INTerrupt
FRINQ	**FR**ont**IN**terrupt **Q**=Low aktiv	Front interrupt Q=low activ
FRONQ	**FRON**t **Q**=Low aktiv	Front Q=low activ
GALEN	**GAL- EN**tkoppelt	GAL- decoupled
IRINT	**I**nf**R**arot **INT**errupt	Infrared interrupt
KL75Q	**KL75** (Zündung), **Q**=LOW-aktiv	CL75 (ignition), Q=LOW-active
LOUDQ	**LOUD**ness **Q**=Low aktiv	Loudness Q=low active
METAL	Umschaltung CC-Entzerrung	Switching CC equalization
MOTFW	Motordrehrichtung	Motordirection of rotation
MONOQ	Gleichkanaldetektor aktiv =**MONOQ**	Common channel detector active=MONOQ
MPXMU	**MPX**-Signal **MU**te	MPX-Signal MUte
MPXUM	**MPX**-Signal **UM**schaltung Empf. 1/2	MPX-Signal switching
MPXIN	**MPX IN**put Stereodecoder	MPX input stereodecoder
MPX1	**MPX** Signal	MPX-Signal
MPX2	**MPX** Signal, FM-Empfänger **2**	MPX-Signal FM-receiver
MPX57	**MPX**-Signal,**57**=RDS/VF	MPX-Signal, 57=RDS/TP
MSDET	**MSDET** = Pausenerkennung	Pause detection
NC	**N**ot **C**onnected (nicht belegt)	not connected
NFCCL	**NF-CC-L**inks	AF tape left
NFCCR	**NF-CC-R**echts	AF tape right
NFCDL	**NF-CD**-Links	AF-CD left

Kurzbezeichnungen		Abbreviations
NFCDM	**NF-CD**W **M**asse	AF-CD-ground
NFCDR	**NF-CD-R**echts	AF-CD-Right
NFFRL	**NF-FR**ont-**L**inks	AF-Front-Left
NFFRR	**NF-FR**ont-**R**echts	AF-Front-Right
NFHEL	**NF-HE**ck-**L**inks	AF-Rear-Left
NFHER	**NF-HE**ck-**R**echts	AF-Rear-Right
NFMAS	**NF-MAS**se	AF-ground
NFMFL	**NF FM L**inks, NF-Controller	AF FM left, AF-Controller
NFMFR	**NF FM R**echts, NF-Controller	AF FM right, AF-Controller
NFFMR	**NF FM**-Empfänger, **R**echts	AF FM receiver right
NFFML	**NF FM**-Empfänger, **L**inks	AF FM receiver left
NFWB	**NF- W**etter**B**and zum Impedanzwandler	AF-Weather band to impedance converter
NFIWB	**NF**-Impedanzwandler**W**etter**B**and	AF-impedance converter
PLAY	Ansteuerung Tonandruckrolle	Control pinch roller
RDGND	**RD**S-Masse	RDS-ground
RDSCL	**RDS-CL**ock	RDS-Clock
RDSDA	**RDS-DA**ten	RDS-Data
RESEQ	**RESE**t, **Q**=LOW-aktiv	Reset, Q=LOW-active
RESFQ	**RES**et-**F**ront, **Q**=LOW-aktiv	Reset-Front, Q=LOW-active
RUNDE	Signal zur Bandlaufüberwachung	tape monitoring
RUNDQ	Signal zur Bandlaufüberwachung Q=Low aktiv	tape monitoring Q=low active
RWQFW	Spurumschaltung	track switching
SBELG	**S**teuerung**BEL**euchtung **G**rün	Control illumination green
SBELR	**S**teuerung**BEL**euchtung **R**ot	Control illumination red
SENDQ	CD-Daten**SEND**en **Q**=Low aktiv	CD-Data transmitting Q=low active
SERC2	**SER**vi**Ce2** = Anschluß zur Codierung / Service	Connector for Coding/Service
SERC3	**SER**vi**Ce3** = Anschluß zur Codierung / Service	Connector for Coding/Service
SLAUF	CD-Umschaltung**S**chnel**LAUF**/Playmode	CD switching, Searching/Playmode
SPUEB	**SP**annungs**UE**berwachung**B**atterie	Voltage monitoring Battery
SPUES	**SP**annungs**UE**berwachung zur**S**teuerung	Voltage monitoring Control
SRENQ	**S**teue**R**ung **EN**able**Q**=LOW-aktiv	Enable Q=LOW-active
STERO	**STER**e**O**-Empfang	STEReO-reception
STMPC	**ST**euerung **MPC** - ein/aus	Control MPC-on/off
STPEN	**ST**o**P EN**able AM-Suchlauf	Control AM-seek
STOPQ	Suchlauf-**STOP**, **Q**=LOW-aktiv	Seek-STOP, Q=LOW-active
STRAQ	**ST**euerung **R**adio **A**n, **Q**=LOW-aktiv	Control Radio on, Q=LOW-active
STROB	**STROB**e-Input	STROBe-Input
STO1Q	**STO**p FM-Empfänger **1 Q**=Low aktiv	Stop FM receiver 1 Q=low active
TELMU	**TEL**efon-**MU**te	Telephone-Mute
TEMPW	**TEMP**eratur-Über**W**achung	TEMPerature-monitoring
UBELF	**U**=Spg.-**BEL**euchtung-**F**ront	U=voltage-illumination-Front
UDBAS	**U-D**auer, **BA**tt Klemme 30 mit Load-Dump-**S**chutz	12 V Batt CL 30 with Load-Dump protection
UDBAT	**U**=Spg.**D**auer**BAT**terie	Permanent voltage Battery
UDCAS	**U**=Spg.**D**auer**CAS**sette	Permanent voltage Tape
UDRAM	**U**=Spg.**D**auer**RAM**	Permanent voltage RAM
UG5V	**U**=Spannung**G**eschaltet**5V**olt	5 Volt switched
UG8V5	**U**=Spannung**G**eschaltet**8,5V**	8,5 Volt switched
UG8VF	**U**=Spannung**G**eschaltet**8,5V F**ront	8,5 Volt switched Front
UGAM	**U**=Spannung**G**eschaltet **AM**	Switched voltage AM
UGAMS	**U**=Spannung**G**eschaltet **AM S**tabil	Switched voltage AM stabilized
UGFMS	**U**=Spannung**G**eschaltet **FM S**tabil	Switched voltage FM stabilized
UGCAS	**U**=Spannung**G**eschaltet **CAS**sette	Switched voltage Tape
UGFM	**U**=Spannung**G**eschaltet **FM**	Switched voltage FM
UGSYM	**U**=Spannung **G**eschaltet **SY**nthesizer	Switched voltage Synthesizer
UPGND	**µP G**rou**ND** (Masse)	µP Ground
UGWB	**U**=Spannung **G**eschaltet **W**etter**B**and	Switched voltage weather band
OFAST	Verstärkung CC-Entzerrerverstärker	Gain CC equalizer amplifier
WBANT	**W**etter**B**and-Empf., **ANT**.signal	Weather band receiver antenna signal
WBABS	**W**etter**B**and-Empf.**ABS**timmspannung	Weather band receiver tuning voltage
WBOSZ	**W**etter**B**and-Empf.**OSZ**illatorfrequenz	Weather band receiver oscillator frequency
WBSTP	**W**etter**B**and-Empf. Suchlauf**ST**o**P**	Weather band receiver Seek-Stop
ZFADI	**ZF**-Ausgang**A**ntennen**DI**versity	IF-output Antenna diversity

2

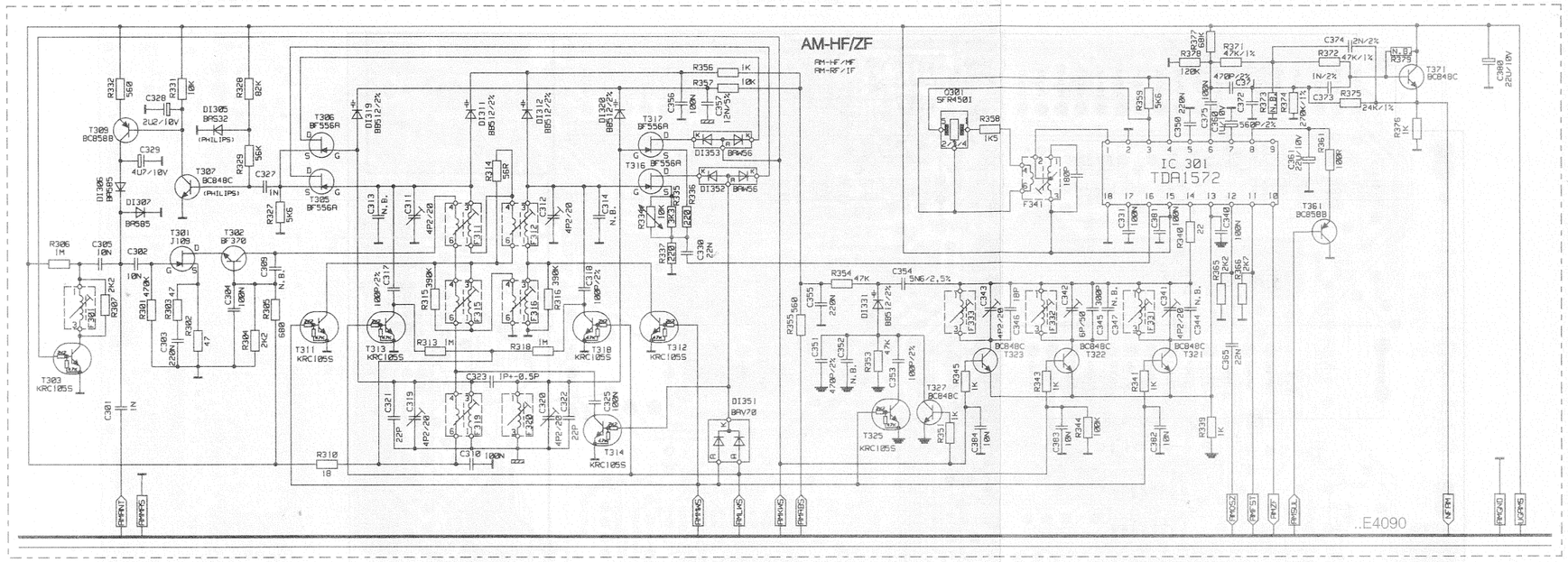

2 Schaltungsplatte .. E 4090
P.C. board .. E 4090

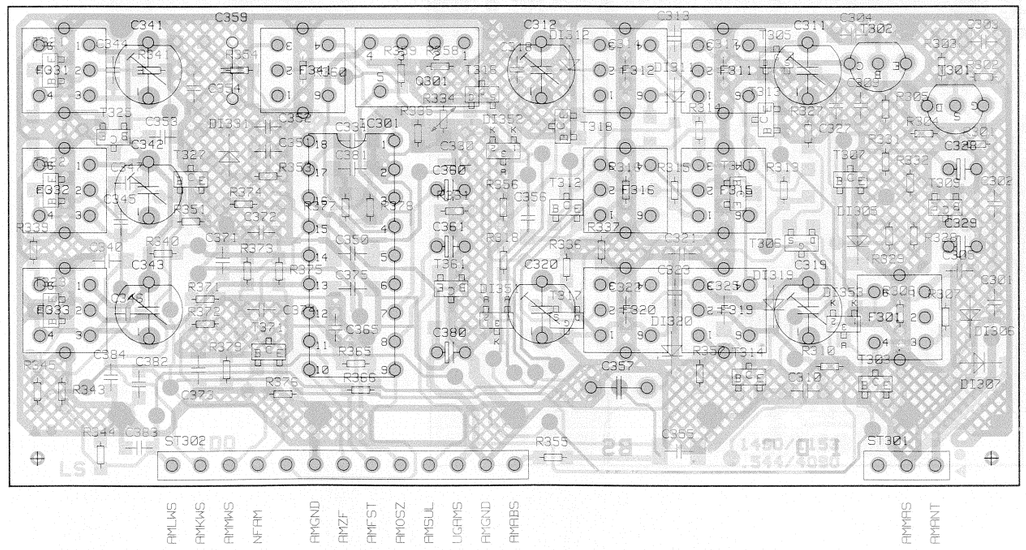

5 **Schaltungsplatte .. E 4010**
P.C. board .. E 4010

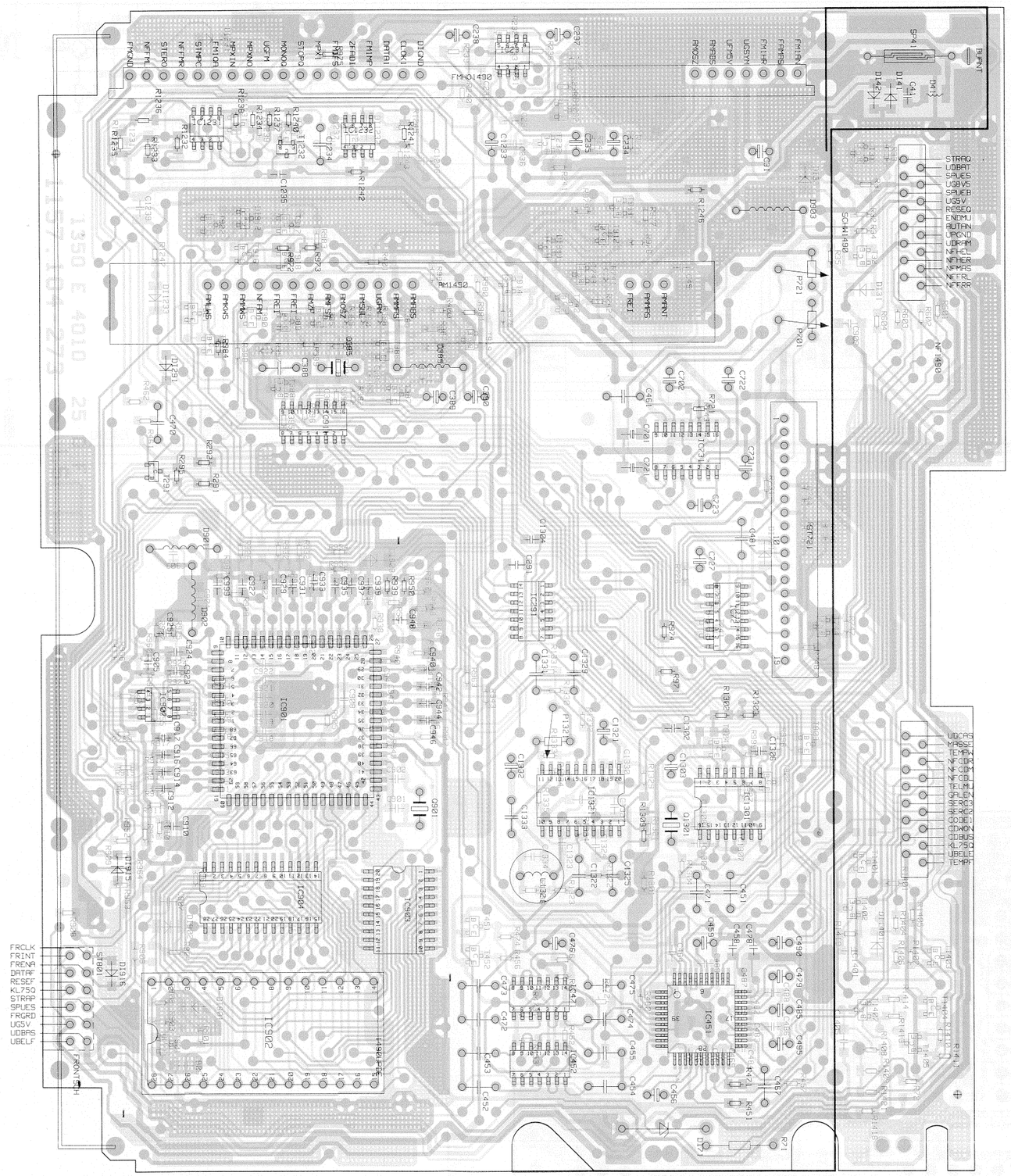

1 Schaltungsplatte Front .. E 9090
P.C. board front .. E 9090
(Typ 1388)

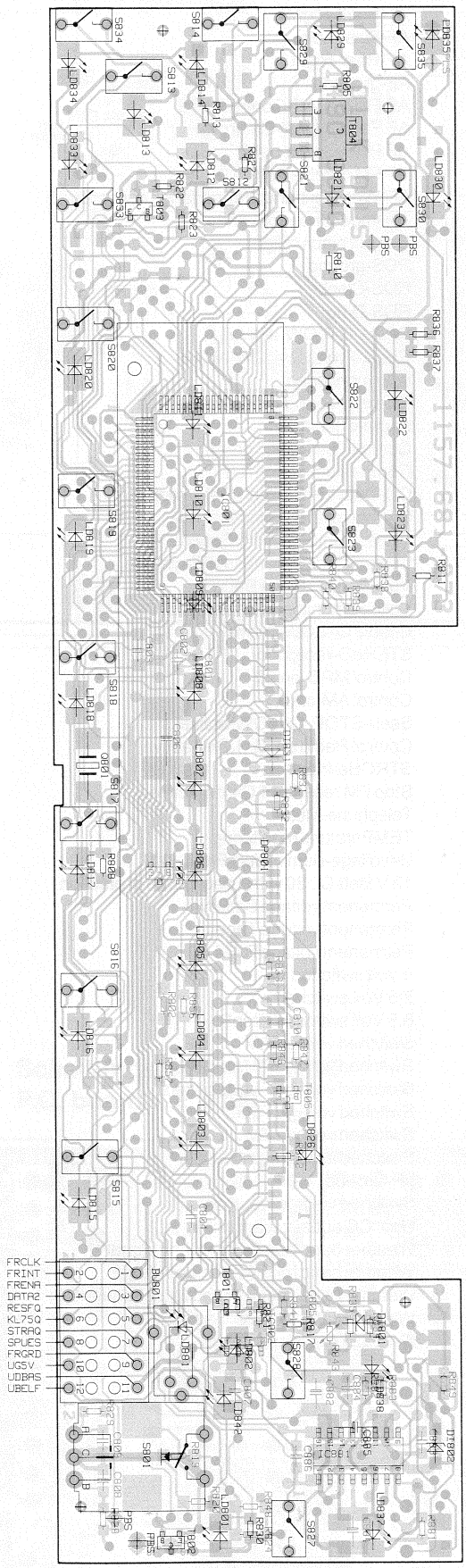

1 Schaltungsplatte Front .. E 9090
P.C. board front .. E 9090
(Typ 1689)

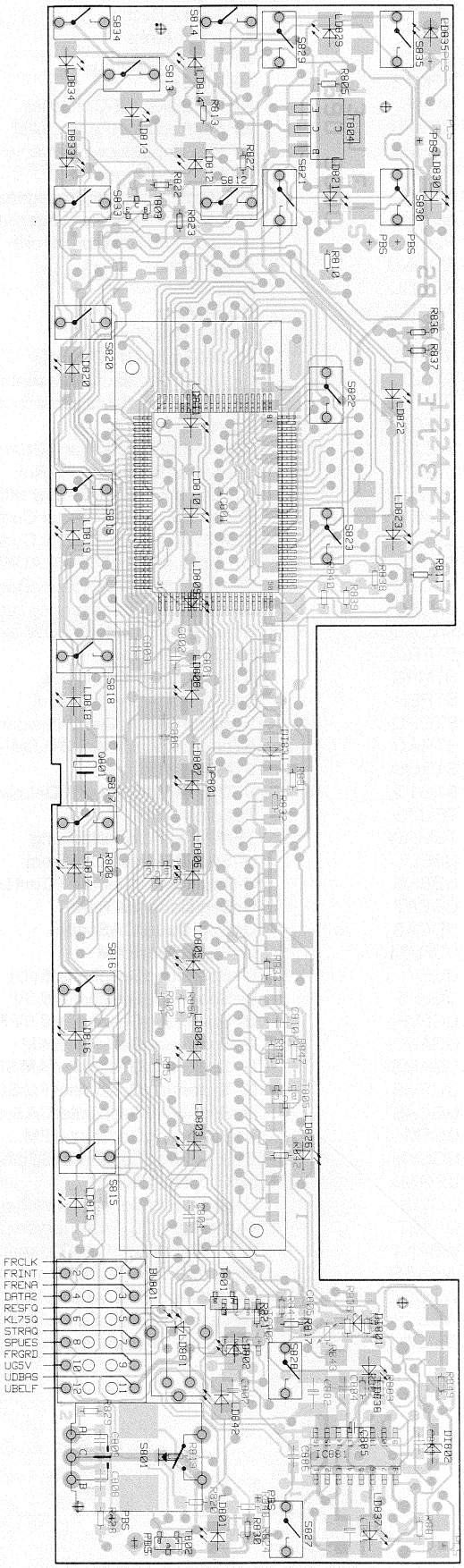

1

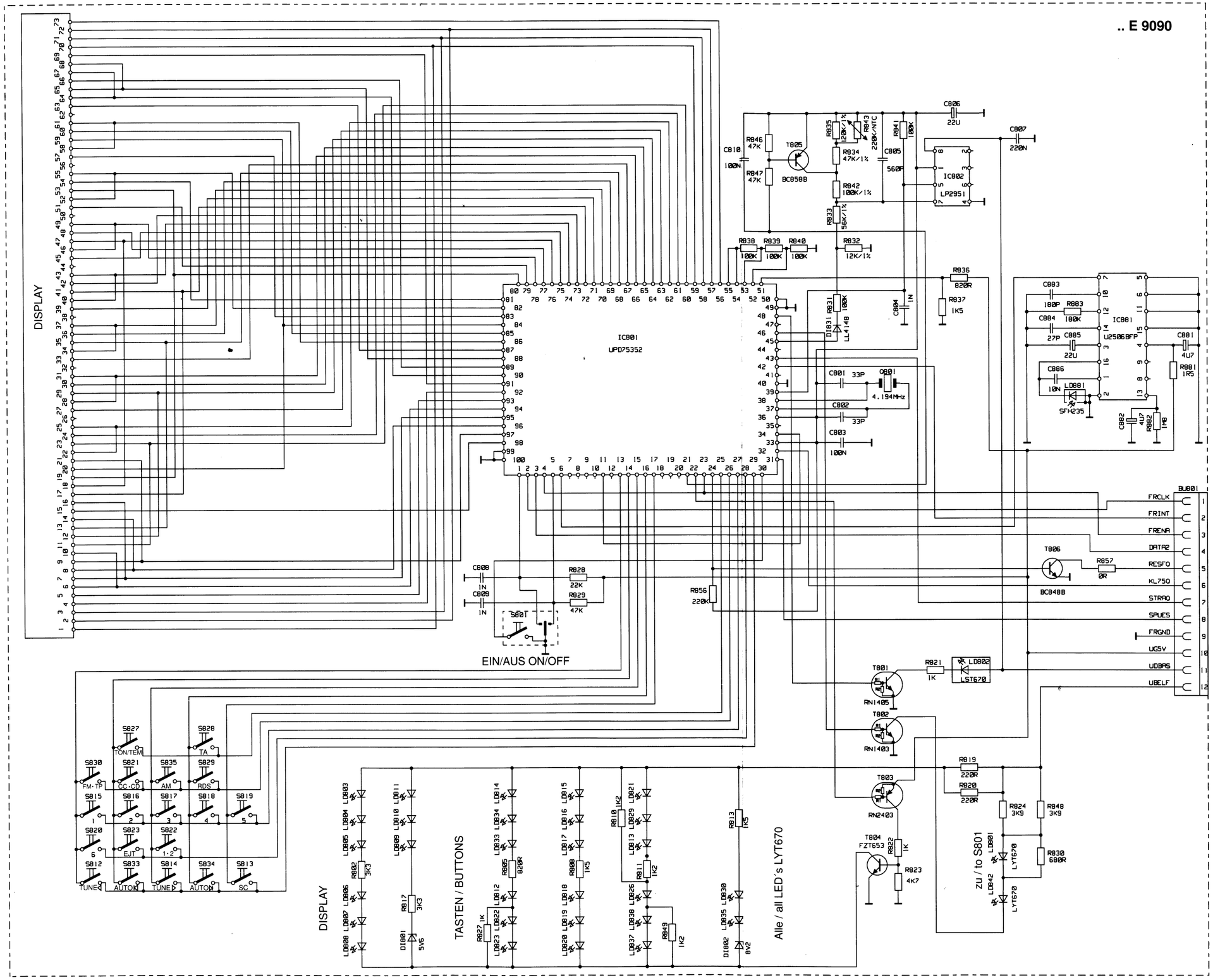
.. E 9090
DISPLAY
IC801
UPD75352
IC802
LP2951
IC881
U2506BFP
BU801
FRCLK
FRINT
FRENA
DATA2
RESFO
KL750
STRAO
SPUES
FRGND
UG5V
UDBAS
UBELF
EIN/AUS ON/OFF
TASTEN / BUTTONS
Alle / all LED´s LYT670
zu / to S801
TON/TEM
TA
FM-TP
CC-CD
AM
RDS
EJT
1·2
TUNE-
AUTO-
TUNE+
AUTO+
SC

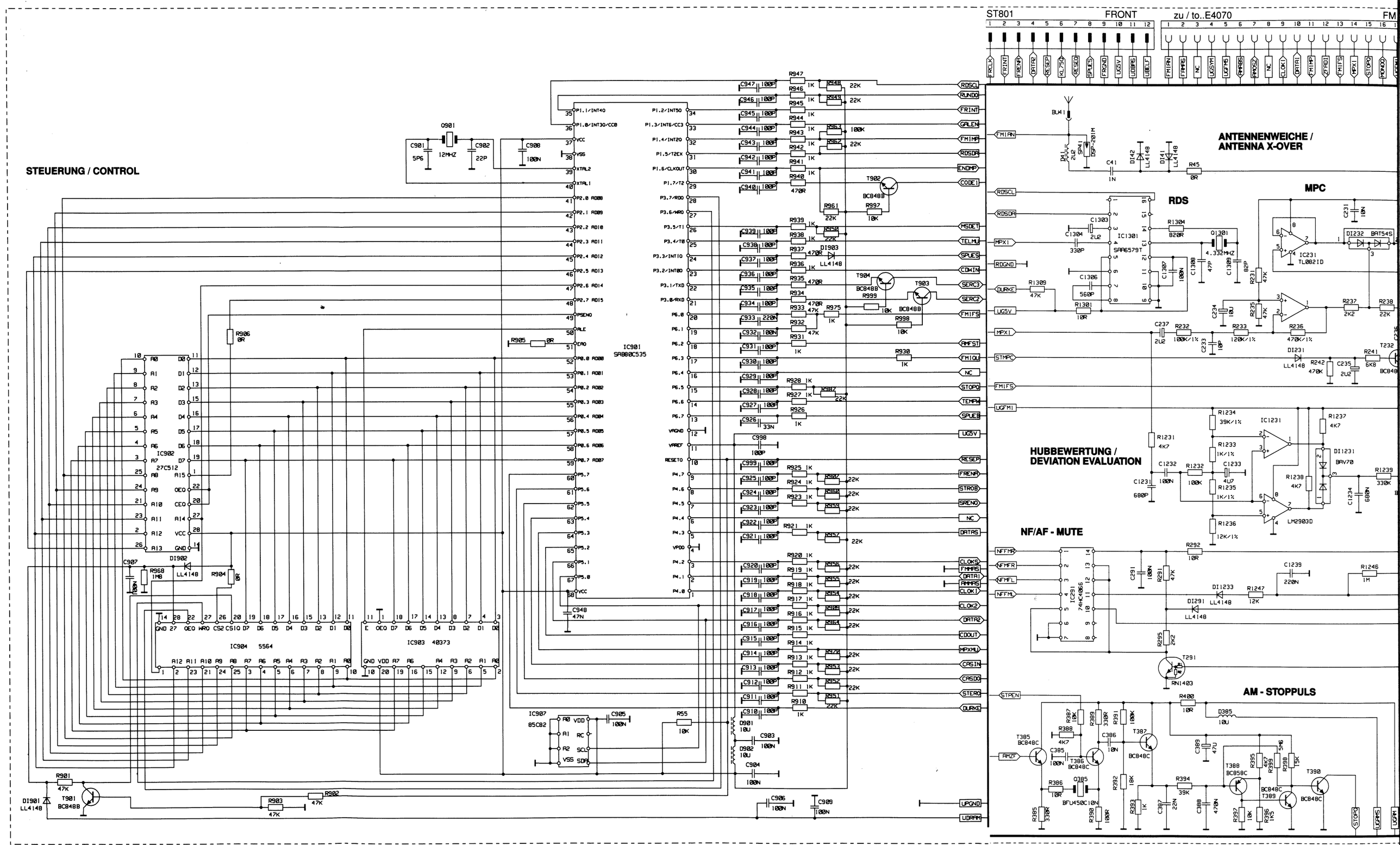
STEUERUNG / CONTROL
ST801
FRONT
zu / to..E4070
FM
ANTENNENWEICHE / ANTENNA X-OVER
RDS
MPC
HUBBEWERTUNG / DEVIATION EVALUATION
NF/AF - MUTE
AM - STOPPULS
IC901 SAB80C535
IC902 27C512
IC904 5564
IC903 40373
IC907 85C82
IC1301 SAA6579T
IC1231 TL0821D
IC1231
LM2903D
IC491 74HC4066
Q901 12MHZ
Q1301 4.332MHZ
Q385 BFU450C

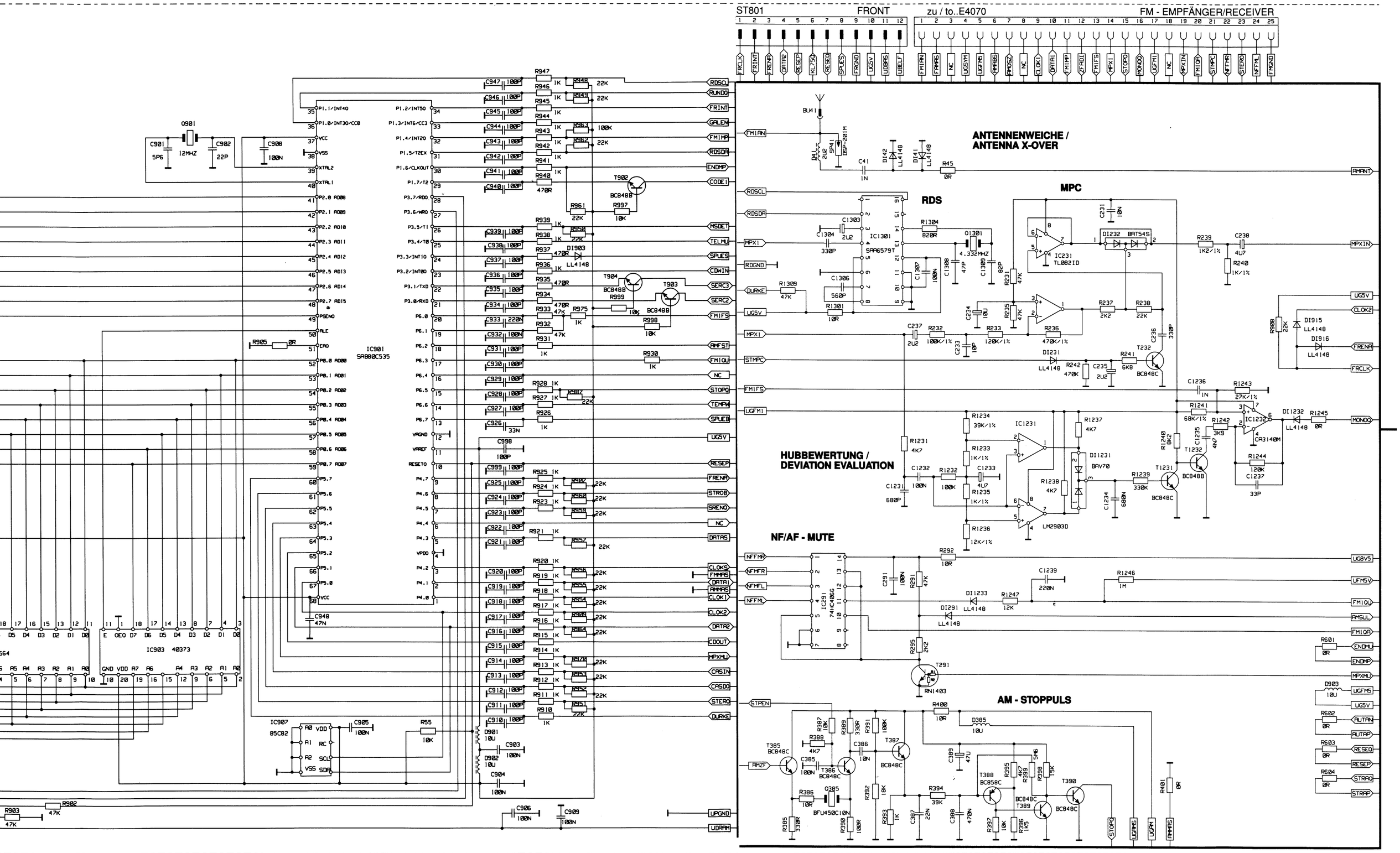
ST801
FRONT
zu / to..E4070
FM - EMPFÄNGER/RECEIVER
ANTENNENWEICHE /
ANTENNA X-OVER
RDS
MPC
HUBBEWERTUNG /
DEVIATION EVALUATION
NF/AF - MUTE
AM - STOPPULS
IC901
SAB80C535
IC903 40373
IC907
85C82
IC1301
SAA6579T
IC231
TL082ID
IC1231
LM2903D
IC291
74HC4066
T291
RN1403
T232
BC848C
T1231
BC848B
T232
BC848C
T385
BC848C
T386
BC848C
T387
BC848C
T388
BC858C
T389
BC848C
T390
BC848C
Q385
BFU450C10N
Q901
12MHZ
Q1301
4.332MHZ
BU41
DSP-201M
D1903
LL4148
D1232
BAT54S
D1231
BAV70
D1915
LL4148
D1916
LL4148
D1232
LL4148
D1233
LL4148
D1291
LL4148
D901
10U
D902
10U
D903
10U
D385
10U
RDSCL
RUNDO
FRINT
GALEN
FM1MP
RDSDA
ENDMP
CODE1
MSDET
TELMU
SPUES
CDWIN
SERC3
SERC2
FM1FS
AMFST
FM1QU
NC
STOPQ
TEMPW
SPUEB
UG5V
RESEP
FRENA
STROB
SRENQ
NC
DATAS
CLOKS
FMMAS
DATA1
AMMAS
CLOK1
CLOK2
DATA2
CDOUT
MPXMU
CASIN
CASDO
STERO
DURKE
UPGND
UDRAM
FRCLK
FRINT
FRENA
DATA2
RESEP
KL75Q
RESEQ
SPUES
FRGND
UG5V
UDBAS
UBELF
FM1AN
FRAMAS
NC
UGSYM
UGFMS
AMASB
AMOSZ
NC
CLOK1
DATA1
FM1MP
ZFADI
FM1FS
MPX1
STOPQ
MONOQ
UGFM1
NC
MPXIN
FM1QA
STMPC
NFTMR
STERO
NFTML
FMGND
AMANT
MPXIN
UG5V
CLOK2
FRENA
FRCLK
MONOQ
UG8V5
UFM5V
FM1QU
AMSUL
FM1QA
ENDMU
ENDMP
MPXMU
UGFM5
UG5V
AUTAN
AUTAP
RESEQ
RESEP
STRAQ
STRAP
STOPQ
UGAMS
UGAM
AMMAS
STPEN
AMZF
NFFMR
NFMFR
NFMFL
NFFML
MPX1
RDGND
DURKE
UG5V
MPX1
STMPC
FM1FS
UGFM1
RDSCL
RDSDA

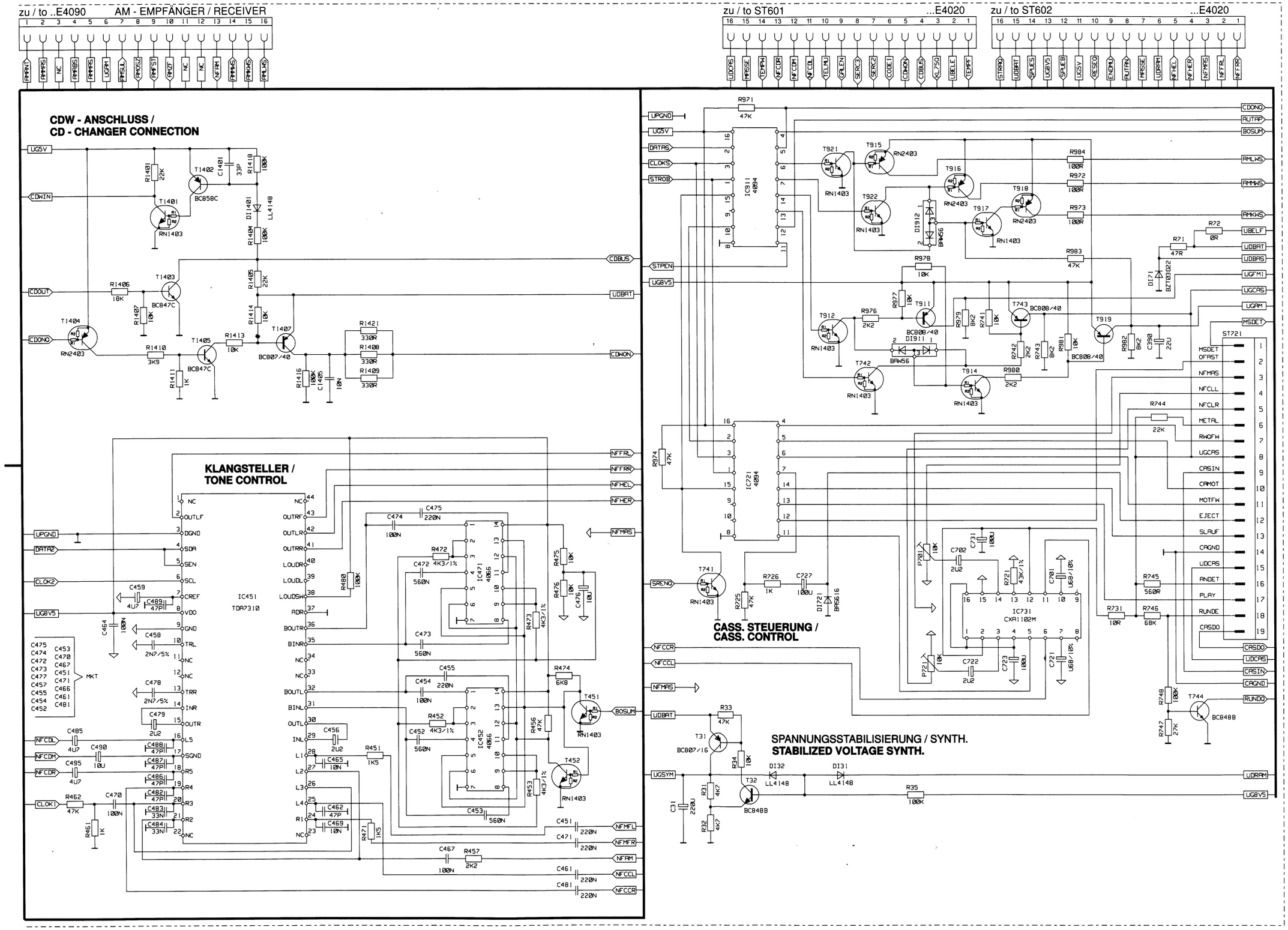
zu / to ..E4090
AM - EMPFÄNGER / RECEIVER
zu / to ST601
...E4020
zu / to ST602
...E4020
CDW - ANSCHLUSS /
CD - CHANGER CONNECTION
KLANGSTELLER /
TONE CONTROL
IC451
TDA7310
CASS. STEUERUNG /
CASS. CONTROL
IC731
CXA1102M
SPANNUNGSSTABILISIERUNG / SYNTH.
STABILIZED VOLTAGE SYNTH.
ST721

4 Schaltungsplatte ..E 4020
P.C. board ..E 4020

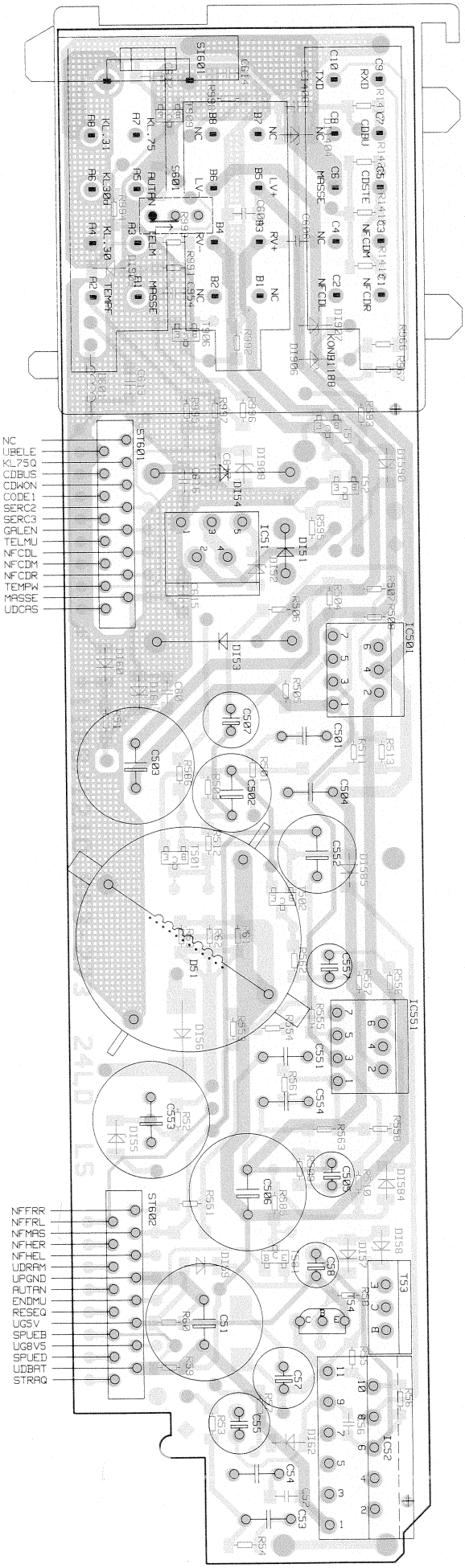

3

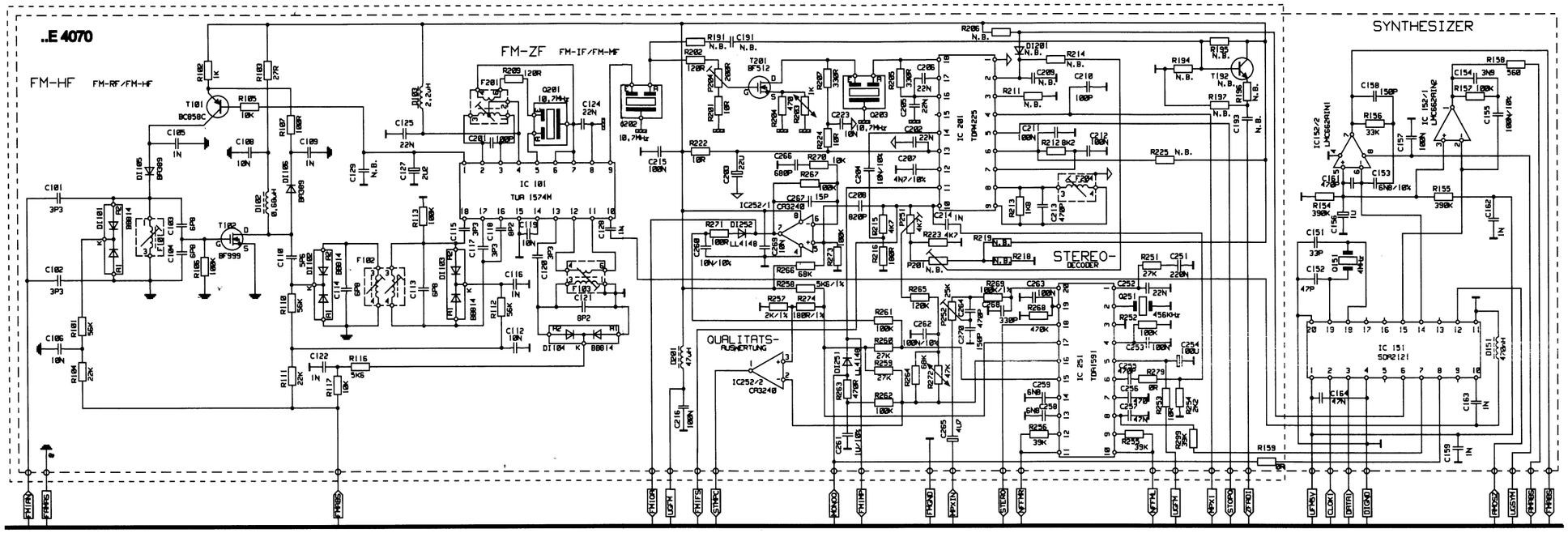
..E 4070
FM-HF
FM-ZF
SYNTHESIZER
STEREO-DECODER
QUALITATS-AUSWERTUNG

4

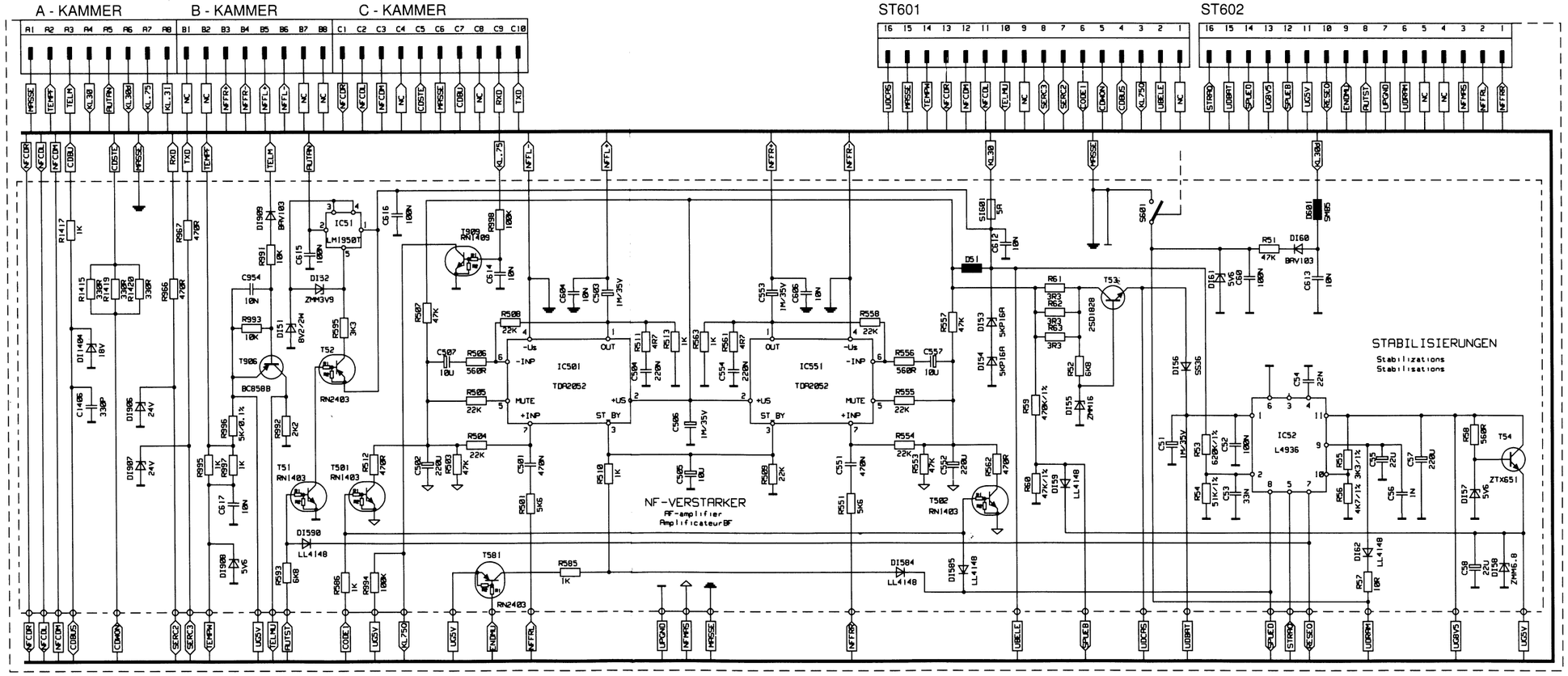
A - KAMMER
B - KAMMER
C - KAMMER
ST601
ST602
NF-VERSTARKER
STABILISIERUNGEN

3 Schaltungsplatte .. E 4070
P.C. board .. E 4070

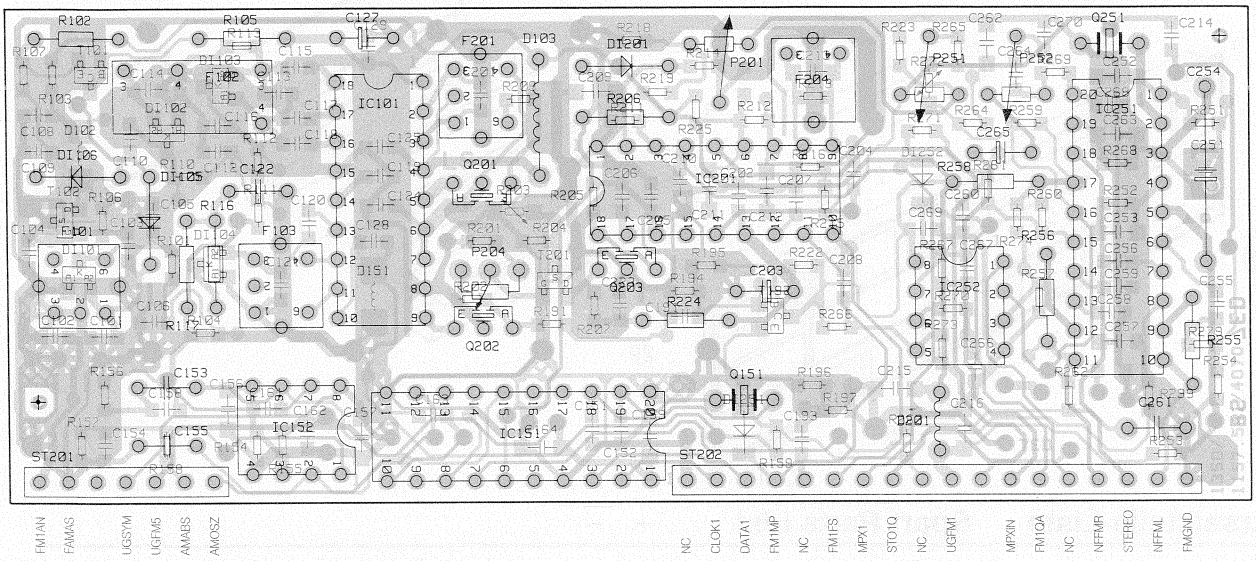

Nachfolgende Bauteile wurden im Laufe der Serie geändert:
C 261 von 1U in 6U8
R 261 von 100K in 330K
R 263 von 470R in 47R
R 274 von 180R in 330R
Änderung in Serie bei Gerätetyp 1388 ab Gerätenummer S 1015001
(siehe auch Serviceinformation 4/95)

Following components are changed during production:
C 261 from 1U to 6U8
R 261 from 100K to 330K
R 263 from 470R to 47R
R 274 from 180R to 330R
Modification was implemeted from the serial number S 1015001
(look also to service information 4/95)

Bedienaufsatz
Operation escutcheon

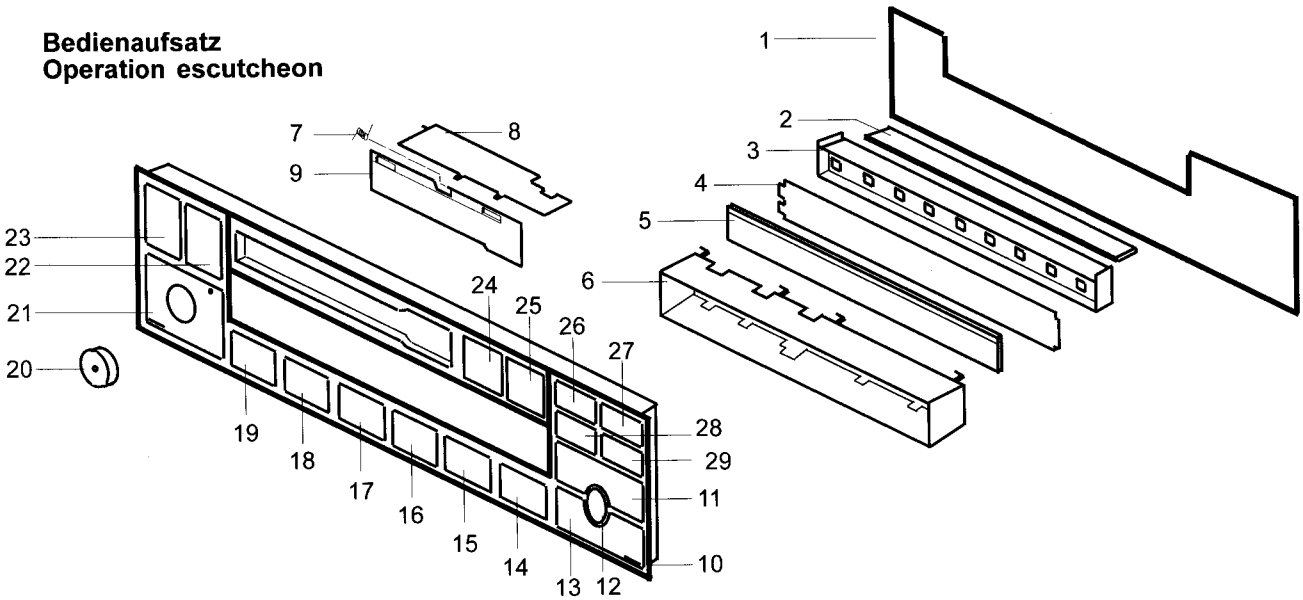

Ersatzteile-Liste Spart Parts List

Lfd.Nr Item.No.	Benennung	Denomination	Pos.i.Zeichnung Diagram pos.	Best.-Nr. Part.No.
	Bedienaufsatz kpl. (Typ 1388)	**Operation escutcheon cpl. (1388)**		**1188.844-257**
	Bedienaufsatz kpl. (Typ 1689)	**Operation escutcheon cpl. (1689)**		**1235.133-257**
1	Schaltungsplatte kpl. (Typ 1388)	Wiring board cpl. (type 1388)	1	1187.678-373
1	Schaltungsplatte kpl. (Typ 1689)	Wiring board cpl. (type 1689)	1	1235.176-373
2	Kontaktleiste	Contact ledge	2	1163.205-278
3	Reflektor	Reflector	3	1157.930-254
4	Streufolie	Reflector foil	4	1163.213-254
5	LCD (Typ 1388)	LCD (type 1388)	5	1166.298-304
5	LCD (Typ 1689)	LCD (type 1689)	5	1223.461-304
6	Rahmen	Frame	6	1157.892-288
7	Feder	Spring	7	1225.049-245
8	Lichtleiter	Light conductor	8	1157.884-254
9	Verschlußklappe	Closing flap	9	1212.303-256
10	Zierblende kpl. (Typ 1388)	Trim plate cpl. (type 1388)	10	1188.852-256
10	Zierblende kpl. (Typ 1689)	Trim plate cpl. (type 1689)	10	1235.168-256
	bestehend aus:	consisting of:		
11	Taste TUNE (Typ 1388)	Button TUNE (type 1388)	11	1217.925-251
11	Taste TUNE (Typ 1689)	Button TUNE (type 1689)	11	1239.538-251
12	Taste SC (Typ 1388)	Button SC (type 1388)	12	1217.933-251
12	Taste SC (Typ 1689)	Button SC (type 1689)	12	1239.546-251
13	Taste AUTO (Typ 1388)	Button AUTO (type 1388)	13	1217.941-251
13	Taste AUTO (Typ 1689)	Button AUTO (type 1689)	13	1239.554-251
14	Taste 6 (Typ 1388)	Button 6 (type 1388)	14	1217.968-251
14	Taste 6 (Typ 1689)	Button 6 (type 1689)	14	1239.252-251
15	Taste 5 (Typ 1388)	Button 5 (type 1388)	15	1217.976-251
15	Taste 5 (Typ 1689)	Button 5 (type 1689)	15	1239.244-251
16	Taste 4 (Typ 1388)	Button 4 (type 1388)	16	1217.984-251
16	Taste 4 (Typ 1689)	Button 4 (type 1689)	16	1239.236-251
17	Taste 3 (Typ 1388)	Button 3 (type 1388)	17	1217.992-251
17	Taste 3 (Typ 1689)	Button 3 (type 1689)	17	1239.228-251
18	Taste 2 (Typ 1388)	Button 2 (type 1388)	18	1218.018-251
18	Taste 2 (Typ 1689)	Button 2 (type 1689)	18	1239.201-251
19	Taste 1 (Typ 1388)	Button 1 (type 1388)	19	1218.026-251
19	Taste 1 (Typ 1689)	Button 1 (type 1689)	19	1239.181-251
20	Drehknopf	Turning knob	20	1218.131-250
21	Tastenplatte ON (Typ 1388)	Key ON (type 1388)	21	1217.712-251
21	Tastenplatte ON (Typ 1689)	Key ON (type 1689)	21	1239.562-251
22	Taste Stummschaltung (Typ 1388)	Mute switch (type 1388)	22	1218.123-251
22	Taste Stummschaltung (Typ 1689)	Mute switch (type 1689)	22	1239.351-251
23	Klang-Temperaturtaste (Typ 1388)	Tone-temperature button (type 1388)	23	1242.393-251
23	Klang-Temperaturtaste (Typ 1689)	Tone-temperature button (type 1689)	23	1239.333-251
24	Taste Auswurf (Typ 1388)	Eject button (type 1388)	24	1217.798-251
24	Taste Auswurf (Typ 1689)	Eject button (type 1689)	24	1239.392-251
25	Taste Spurumschaltung (Typ 1388)	Track switch-over button (type 1388)	25	1217.811-251
25	Taste Spurumschaltung (Typ 1689)	Track switch-over button (type 1689)	25	1239.422-251
26	Taste FM TP (Typ 1388)	Button FM TP (type 1388)	26	1217.836-251
26	Taste FM TP (Typ 1689)	Button FM TP (type 1689)	26	1239.457-251
27	Taste AM (Typ 1388)	Button AM (type 1388)	27	1217.860-251
27	Taste AM (Typ 1689)	Button AM (type 1689)	27	1239.481-251
28	Taste CC CD (Typ 1388)	Button CC CD (type 1388)	28	1217.887-251
28	Taste CC CD (Typ 1689)	Button CC CD (type 1689)	28	1239.511-251
29	Taste RDS (Typ 1388)	Button RDS (type 1388)	29	1217.909-251
29	Taste RDS (Typ 1689)	Button RDS (type 1689)	29	1239.279-251

Ersatzteile-Liste Spart Parts List

Lfd.Nr Item.No.	Benennung	Denomination	Pos.i.Schaltbild Diagram pos.	Artikel-Nr. Article No.	Best.-Nr. Part.No.
	Schaltungsplatte kpl. (Typ 1388)	**P.C.board cpl. (type 1388)**	1	**.. E 9090**	**1187.678-373**
	Schaltungsplatte kpl. (Typ 1689)	**P.C.board cpl. (type 1689)**		**.. E 9090**	**1235.176-373**
	bestehend aus:	consisting of:			
1	Halter Infrarotempfänger	Holder infrared receiver			1172.700-267
2	Abschirmhaube Infrarot-empfänger	Protective cover infrared receiver			1172.697-283
3	Fotodiode	Photo diode			1173.154-304
4	Buchsenleiste 12pol.	Multipoint connector 12 poles			1169.025-277
5	Inkrementgeber	Increment pick-up			1155.466-385
6	Schalter (Typ 1388)	Switch (type 1388)	S812-823 827-830, 833-835		1158.491-278
7	Schalter (Typ 1689)	Switch (type 1689)	S812, 814,833,834		1158.491-278
8	Schalter (Typ 1689)	Switch (type 1689)	S813,815-823 827-830, 835		1230.239-278
9	LED	LED	LD801,803-823, 826, 829,830,833,834,835, 837,838,842		1158.074-304
10	LED (rot)	LED (red)	LD802		1158.767-304
11	Keramikresonator	Ceramic resonator	Q801		1171.501-345
12	IC	IC	IC801	NEC UPD75352A	1225.278-308
13	IC	IC	IC802	NSC LP2951CM	0676.144-308
14	IC	IC	IC881	TEL U2506BFP	0639.400-308
15	Diode	Diode	DI801	BAW 5,6	0672.483-301
16	Diode	Diode	DI802	BAW 8V2	0672.459-301
17	Diode	Diode	DI831	BAW LL4148	0659.592-301
18	Transistor	Transistor	T801	BAW KRC105S/ BCR108	1172.662-302
19	Transistor	Transistor	T802	BAW KRC103S/ DTC124EC	1172.646-302
20	Transistor	Transistor	T803	BAW KRA103S/ RN2403	1172.654-302
21	Transistor	Transistor	T804	ZEX FZT653	1148.729-302
22	Transistor	Transistor	T805	BAW BC858B	1224.735-302
23	Transistor	Transistor	T806	BAW BC848B	0659.614-302
24	Kondensator	Capacitor	C801,802	33P	1066.056-315
25	Kondensator	Capacitor	C803,810	100N	1113.399-315
26	Kondensator	Capacitor	C804,808,809	1N	1119.060-315
27	Kondensator	Capacitor	C805	560P	1156.561-315
28	Elko	Elco	C806	22U	0683.809-313
29	Kondensator	Capacitor	C807	220N	1119.745-315
30	Kondensator	Capacitor	C881,882	4U7	1028.715-313
31	Kondensator	Capacitor	C883	180P	1066.080-315
32	Kondensator	Capacitor	C884	27P	1066.048-315
33	Kondensator	Capacitor	C885	22U	0683.809-313
34	Kondensator	Capacitor	C886	10N	1119.117-315
35	Widerstand	Resistor	R802,817	3K3	1109.146-323
36	Widerstand	Resistor	R805	820R	1109.022-323
37	Widerstand	Resistor	R808,813	1K5	1109.081-323
38	Widerstand	Resistor	R810,824,848	3K9	1109.162-323
39	Widerstand	Resistor	R811	1K2	1109.065-323
40	Widerstand	Resistor	R819,820	220R	1108.913-323
41	Widerstand	Resistor	R821,822,827	1K	1159.291-323
42	Widerstand	Resistor	R823	4K7	1159.380-323
43	Widerstand	Resistor	R828	22K	1159.501-323
44	Widerstand	Resistor	R829,846,847	47K	1159.577-323
45	Widerstand	Resistor	R830	680R	1159.283-323
46	Widerstand	Resistor	R831,838,839,840,841	100K	1159.631-323
47	Widerstand	Resistor	R832	12K	1159.445-323
48	Widerstand	Resistor	R833	56K	1173.091-323
49	Widerstand	Resistor	R834	47K	1159.569-323
50	Widerstand	Resistor	R835	120K	1173.103-323
51	Widerstand	Resistor	R836	820R	1163.299-323
52	Widerstand	Resistor	R837	1K5	1159.313-323
53	Widerstand	Resistor	R842	100K	1159.623-323
54	Widerstand	Resistor	R843	220K	1155.067-325
55	Widerstand	Resistor	R849	1K2	1159.305-323
56	Widerstand	Resistor	R856	220K	1159.682-325
57	Widerstand	Resistor	R857	0R	1018.302-323
58	Widerstand	Resistor	R881	1R5	1163.264-323
59	Widerstand	Resistor	R882	1M8	1166.506-323
60	Widerstand	Resistor	R883	180K	1159.674-323

Ersatzteile-Liste Spart Parts List

Lfd.Nr Item.No.	Benennung	Denomination	Pos.i.Schaltbild Diagram pos.	Artikel-Nr. Article No.	Best.-Nr. Part.No.
	Schaltungsplatte	**P.C. board**	4	**.. E 4020**	**1210.955-373**
	bestehend aus:	consisting of:			
1	Konnektor	Connector			1157.868-277
2	Steckerleiste	Multipoint connector	ST601,602		1158.724-277
3	Schalter	Switch	S601		1166.476-278
4	Sicherung	Fuse	SI601	T 5A	1073.206-392
5	IC	IC	IC51	NSC LM1950T	1167.286-308
6	IC	IC	IC52	STG L4936N	1236.611.308
7	IC	IC	IC501,551	SGT TDA2052	1180.304-308
8	Drossel	Choke	D51		1185.632-334
9	Drossel	Choke	D601		1156.111-347
10	Diode	Diode	DI51	MOT 1N5344	0373.087-301
11	Diode	Diode	DI52	BAW 3V9	1148.834-301
12	Diode	Diode	DI53,54	GIC 5KP16A	1074.717-301
13	Diode	Diode	DI55	BAW 16	1042.084-301
14	Diode	Diode	DI56	GIC SS36	1213.989-301
15	Diode	Diode	DI57,61,908	BAW 5V6 2%	1076.353-301
16	Diode	Diode	DI58	BAW 6V8 5%	1118.757-301
17	Diode	Diode	DI59,584,585,590	BAW LL4148	0659.592-301
18	Diode	Diode	DI60,909	BAW BAV103	1123.866-301
19	Diode	Diode	DI62	SGT TMM BAT48	1212.141-301
20	Diode	Diode	DI906,907	BAW 24	1076.361-301
21	Diode	Diode	DI1404	BAW 18	1123.874-301
22	Transistor	Transistor	T51,501,502	BAW KRC103S	1172.646.302
23	Transistor	Transistor	T52,581	BAW KRA103S	1172.654-302
24	Transistor	Transistor	T54	ZEX ZTX651S	1050.761-302
25	Transistor	Transistor	T906	BAW BC858B	1224.735-302
26	Transistor	Transistor	T909	BAW KRC109S	1172.921-302
27	Elko	Elco	C51,503,506,553	1M	1185.179-312
28	Kondensator	Capacitor	C52,615,616	100N	1113.399-315
29	Kondensator	Capacitor	C53	33N	0393.487-314
30	Kondensator	Capacitor	C54	22N	0392.995-314
31	Elko	Elco	C55	22U	1236.628-312
32	Kondensator	Capacitor	C56	1N	1173.324-315
33	Elko	Elco	C57	220U	1187.813-312
34	Elko	Elco	C58	22U	1172.034-312
35	Kondensator	Capacitor	C60	100N	1119.214-315
36	Kondensator	Capacitor	C501,551	470N	0356.514-314
37	Elko	Elco	C502,552	220U	1168.819-312
38	Kondensator	Capacitor	C504,554	220N	0348.491-314
39	Elko	Elco	C505,507,557	10U	1020.242-312
40	Kondensator	Capacitor	C604,606,612-614, 617,954	10N	1113.321-315
41	Kondensator	Capacitor	C1406	330P	1083.864-315
42	Widerstand	Resistor	R51,503,507,553,557	47K	1109.413-323
43	Widerstand	Resistor	R52,593	6K8	1109.227-323
44	Widerstand	Resistor	R53	620K	1178.326-323
45	Widerstand	Resistor	R54	51K	1076.892-323
46	Widerstand	Resistor	R55	3K3	1007.750-323
47	Widerstand	Resistor	R56	4K7	1007.785-323
48	Widerstand	Resistor	R57	10R	1108.743-323
49	Widerstand	Resistor	R58,506,556	560R	1108.980-323
50	Widerstand	Resistor	R59	470K	1008.137-323
51	Widerstand	Resistor	R60	47K	1008.021-323
52	Widerstand	Resistor	R61,62,63	3R3	1108.697-323
53	Widerstand	Resistor	R501,551	5K6	1109.200-323
54	Widerstand	Resistor	R504,505,508,509, 554,555,558	22K	1109.340-323
55	Widerstand	Resistor	R510,513,563,585, 586,995,997,1417	1K	1109.049-323
56	Widerstand	Resistor	R511,561	4R7	1108.719-323
57	Widerstand	Resistor	R512,562	470R	1108.972-323
58	Widerstand	Resistor	R595	3K3	1109.146-323
59	Widerstand	Resistor	R966,967	470R	1122.800-323
60	Widerstand	Resistor	R991,993	10K	1109.261-323
61	Widerstand	Resistor	R992	2K2	1109.111-323
62	Widerstand	Resistor	R994,998	100K	1109.472-323
63	Widerstand	Resistor	R996	5K	1188.801-323
64	Widerstand	Resistor	R1415,1419,1420	330R	1011.030-323

Ersatzteile-Liste Spart Parts List

Lfd.Nr Item.No.	Benennung	Denomination	Pos.i.Schaltbild Diagram pos.	Artikel-Nr. Article No.	Best.-Nr. Part.No.
	Schaltungsplatte	**P.C. board**	3	**.. E 4070**	**1157.558 -373**
	bestehend aus:	consisting of:			
1	Abschirmrahmen FM	Screening frame FM			1157.914 -288
2	Abschirmdeckel FM	Screening cover FM			1164.279 -284
3	Stiftleiste 7 polig	Pin ledge 7 poles	ST101		1163.027 -277
4	Stiftleiste 18 polig	Pin ledge 18 poles	ST102		1163.043 -277
5	Quarz	Quartz	Q151	4,000 MHz	1176.234 -342
6	Keramikfilter	Ceramic filter	Q201,202	MUR SFE	1227.701 -345
7	Keramikfilter	Ceramic filter	Q203	MUR SFE	1134.140 -345
8	Keramikresonator	Ceramic resonator	Q251	MUR CSB	1128.760 -345
9	Filter	Filter	F101	FMV 1710	1176.625 -341
10	Filter	Filter	F102	FMV 1715	1176.633 -341
11	Filter	Filter	F103	FMO 1720	1154.265 -341
12	Filter	Filter	F201	FMZF1730	1154.257 -341
13	Filter (Phasenkreis FM)	Filter (Phase circuit FM)	F204		0682.322 -341
14	IC	IC	IC101	SIE TUA1574M	0671.444 -308
15	IC	IC	IC151	SIE SDA2121-2	1154.729 -308
16	IC	IC	IC152	NSC LMC662AIN	1155.091 -308
17	IC	IC	IC201	SIE TDA4225	1126.121 -308
18	IC	IC	IC251	PHI TDA1591	1127.731 -308
19	IC	IC	IC252	RCA CA3240E	0703.321 -308
20	Drossel	Choke	D102	0.68 UH	1149.326 -334
21	Drossel	Choke	D103	2.2 UH	0604.771 -334
22	Drossel	Choke	D151	0.47 UH	1148.494 -334
23	Drossel	Choke	D201	47 UH	1175.726 -334
24	Diode	Diode	DI101,102,103,104	BAW BB814	1183.710 -301
25	Diode	Diode	DI105,106	BAW BA479/389	0672.505 -301
26	Diode	Diode	DI202	BAW BAV99	1073.656 -301
27	Diode	Diode	DI251,252	BAW LL4148	0659.592 -301
28	Transistor	Transistor	T101	BAW BC858C	1224.743 -302
29	Transistor	Transistor	T102	SIE BF999	0683.401 -302
30	Transistor	Transistor	T201	PHI BF512	1070.088 -302
31	Kondensator	Capacitor	C101,102,115,117,120	3P3	1063.057 -315
32	Kondensator	Capacitor	C103,104,113,114	6P8	1063.081 -315
33	Kondensator	Capacitor	C104	1P8	1062.638 -315
34	Kondensator	Capacitor	C105,109,116,128,162	1N	1173.324 -315
35	Kondensator	Capacitor	C106,108,112,119,204, 223,260,269	10N	1119.117 -315
36	Kondensator	Capacitor	C110	5P6	1063.073 -315
37	Kondensator	Capacitor	C118	8P2	1063.091 -315
38	Kondensator	Capacitor	C121	8P2	1176.447 -315
39	Kondensator	Capacitor	C122	1N	0504.882 -314
40	Kondensator	Capacitor	C124,125,202,205,206	22N	1119.176 -315
41	Elko	Elco	C127	2U2	1047.991 -312
42	Kondensator	Capacitor	C151	33P	1066.056 -315
43	Kondensator	Capacitor	C152	47P	1066.064 -315
44	Kondensator	Capacitor	C153	6N8	0356.417 -314
45	Kondensator	Capacitor	C154	3N9	1162.403 -315
46	Kondensator	Capacitor	C155	100N	0320.102 -314
47	Elko	Elco	C156	1U	0672.572 -313
48	Kondensator	Capacitor	C157,211,212,215,216, 253,262,263	100N	1113.399 -315
49	Kondensator	Capacitor	C158,270	150P	1073.516 -315
50	Kondensator	Capacitor	C159	1N	1083.902 -315
51	Kondensator	Capacitor	C161,255,256,264	470P	1066.110 -315
52	Kondensator	Capacitor	C163,214	1N	1119.060 -315
53	Kondensator	Capacitor	C164	47N	1119.206 -315
54	Kondensator	Capacitor	C201	100P	1176.455 -315
55	Elko	Elco	C203	22U	1172.026 -312
56	Kondensator	Capacitor	C207	4N7	1166.751 -315
57	Kondensator	Capacitor	C208	820P	1156.624 -315
58	Kondensator	Capacitor	C209	47N	1113.372 -315
59	Kondensator	Capacitor	C210	100P	1066.072 -315
60	Kondensator	Capacitor	C213	470P	0495.001 -315
61	Kondensator	Capacitor	C215	100N	1119.702 -315
62	Kondensator	Capacitor	C251	220N	1119.745 -315
63	Kondensator	Capacitor	C252	22N	1113.356 -315
64	Elko	Elco	C254	100U	1178.172 -312
65	Kondensator	Capacitor	C257	47N	1113.372 -315
66	Kondensator	Capacitor	C258,259	6N8	1166.409 -315
67	Elko	Elco	C261	6U8	1240.226 -313
68	Elko	Elco	C265	4U7	1171.933 -312
69	Kondensator	Capacitor	C266	680P	1115.571 -315
70	Kondensator	Capacitor	C267	15P	1066.013 -315

Ersatzteile-Liste Spart Parts List

Lfd.Nr Item.No.	Benennung	Denomination	Pos.i.Schaltbild Diagram pos.	Artikel-Nr. Article No.	Best.-Nr. Part.No.
71	Kondensator	Capacitor	C268	330P	1066.102-315
72	Trimmerwiderstand	Trimmer resistor	P204	200R Lin	1003.437-329
73	Trimmerwiderstand	Trimmer resistor	P251	4K7 Lin	1062.549-329
74	Trimmerwiderstand	Trimmer resistor	P252	25K Lin	1058.746-329
75	Widerstand	Resistor	R101,110,112	56K	1159.585-323
76	Widerstand	Resistor	R102	1K	0504.793-323
77	Widerstand	Resistor	R103	27R	1159.054-323
78	Widerstand	Resistor	R104,111	22K	1159.501-323
79	Widerstand	Resistor	R105,117	10K	0562.696-323
80	Widerstand	Resistor	R106,113,157,252, 262,267,273,276	100K	1159.631-323
81	Widerstand	Resistor	R107,271	100R	1159.100-323
82	Widerstand	Resistor	R116,258	5K6	0660.450-323
83	Widerstand	Resistor	R154,155	390K	1159.747-323
84	Widerstand	Resistor	R156	33K	1159.542-323
85	Widerstand	Resistor	R158	560R	1159.275-323
86	Widerstand	Resistor	R159,279	0R	1018.302-323
87	Widerstand	Resistor	R201,222,253	10R	1159.011-323
88	Widerstand	Resistor	R202,209	120R	1159.127-323
89	Widerstand NTC	Resistor NTC	R203	1K	0683.620-325
90	Widerstand	Resistor	R204	470R	1159.267-323
91	Widerstand	Resistor	R205,207,274	330R	1159.224-323
92	Widerstand	Resistor	R208	1K	1159.291-323
93	Widerstand	Resistor	R212	8K2	1159.429-323
94	Widerstand	Resistor	R213	1K8	1159.321-323
95	Widerstand	Resistor	R215,223	4K7	1159.380-323
96	Widerstand	Resistor	R216	180R	1159.178-323
97	Widerstand	Resistor	R224	10R	1164.953-323
98	Widerstand	Resistor	R251,259,260	27K	1159.534-323
99	Widerstand	Resistor	R254	2K2	1159.348-323
100	Widerstand	Resistor	R255,256	39K	0660.426-323
101	Widerstand	Resistor	R257	2K	1159.331-323
102	Widerstand	Resistor	R261	330K	1162.675-323
103	Widerstand	Resistor	R263	47R	1159.062-323
104	Widerstand	Resistor	R264,266	68K	1159.593-323
105	Widerstand	Resistor	R265	120K	1159.641-323
106	Widerstand	Resistor	R268	470K	1159.755-323
107	Widerstand	Resistor	R269	100K	1159.623-323
108	Widerstand	Resistor	R270	10K	1159.437-323
109	Widerstand NTC	Resistor NTC	R272	47K	1044.907-325
110	Widerstand	Resistor	R299	39K	1159.550-323
	Schaltungsplatte bestehend aus:	**P.C. board** consisting of:	2	.. E 4090	**1157.671-373**
1	Abschirmrahmen	Screening frame			1157.906-288
2	Stiftleiste	Pin ledge	ST301		1163.019-277
3	Stiftleiste	Pin ledge	ST302		1163.035-277
4	Keramikfilter	Ceramic filter	Q301		1155.911-345
5	Filter	Filter	F301		1163.795-341
6	Filter	Filter	F311		1163.868-341
7	Filter	Filter	F312		1163.876-341
8	Filter	Filter	F315	LWZ 1605	1163.833-341
9	Filter	Filter	F316	LWZ 1610	1163.841-341
10	Filter	Filter	F319	KWZ 1645	1163.906-341
11	Filter	Filter	F320	KWZ 1650	1163.914-341
12	Filter	Filter	F331	MWO 1635	1163.884-341
13	Filter	Filter	F332	LWO 1615	1163.851-341
14	Filter	Filter	F333	KWO 1655	1163.922-341
15	Filter	Filter	F341	AM-ZF 1670	1163.930-341
16	IC	IC	IC301	PHI TDA1572	1158.589-308
17	Diode	Diode	DI305	PHI BAS32	0574.821-301
18	Diode	Diode	DI306,307	SIE BA585	1152.106-301
19	Diode	Diode	DI311,312,319,320, 331	SIE BB512	1152.092-301
20	Diode	Diode	DI351	BAW BAV70	0672.475-301
21	Diode	Diode	DI352,353	BAW BAW56	1043.587-301
22	Transistor	Transistor	T301	PHI J110 0N4742	1164.082-302
23	Transistor	Transistor	T302	PHI BF370	0659.681-302
24	Transistor	Transistor	T303,311,312,313, 314,318,325	BAW KRC105S/ BCR108	1172.662-302
25	Transistor	Transistor	T305,306,316,317	PHI BF556A	1161.172-302
26	Transistor	Transistor	T307	BC848B	0584.126-302
27	Transistor	Transistor	T309,361	BAW BC858B	0659.673-302

Ersatzteile-Liste Spart Parts List

Lfd.Nr Item.No.	Benennung	Denomination	Pos.i.Schaltbild Diagram pos.	Artikel-Nr. Article No.	Best.-Nr. Part.No.
28	Transistor	Transistor	T321,322,323	BAW BC848C	1231.820-302
29	Transistor	Transistor	T327,371	BAW BC848C	0659.622-302
30	Trimmerkondensator	Trimmer capacitor	CT311,312,319,320, 341,	4P2/20P	1152.114 -311
31	Trimmerkondensator	Trimmer capacitor	CT342	6P/50P	1177.753 -311
32	Kondensator	Capacitor	C301,327	1N	1119.060 -315
33	Kondensator	Capacitor	C302,382,383,384	10N	1119.117 -315
34	Kondensator	Capacitor	C303,350,355,355	220N	1119.745 -315
35	Kondensator	Capacitor	C304,310,325,331, 340,356,381	100N	1113.399 -315
36	Kondensator	Capacitor	C317,318,353,	100P	1162.160 -315
37	Kondensator	Capacitor	C321,322,346	22P	1066.031 -315
38	Kondensator	Capacitor	C323	1P	1062.611 -315
39	Elko	Elco	C328	2U2	1171.895 -312
40	Elko	Elco	C329	4U7	1171.925 -312
41	Kondensator	Capacitor	C330,365	22N	1119.176 -315
42	Kondensator	Capacitor	C345	300P	1177.771 -315
43	Kondensator	Capacitor	C346 *	18P *	1066.021 -315
44	Kondensator	Capacitor	C351,371	470P	1162.241 -315
45	Kondensator	Capacitor	C354	5N6	1172.638 -315
46	Kondensator	Capacitor	C357	12N	1166.484 -314
47	Elko	Elco	C360	1U	1171.879 -312
48	Elko	Elco	C361,380	22U	1172.018 -312
49	Kondensator	Capacitor	C372	560P	1162.284 -315
50	Kondensator	Capacitor	C373	1N	1162.322 -315
51	Kondensator	Capacitor	C374	2N	1162.365 -315
52	Kondensator	Capacitor	C375	100N	1119.214 -315
53	Widerstand	Resistor	R301	470K	1159.755 -323
54	Widerstand	Resistor	R302,303	47R	1159.062 -323
55	Widerstand	Resistor	R304,307,365	2K2	1159.348 -323
56	Widerstand	Resistor	R305	680R	1159.283 -323
57	Widerstand	Resistor	R306,313,318	1M	1159.781 -323
58	Widerstand	Resistor	R310	18R	1159.021 -323
59	Widerstand	Resistor	R314	56R	1173.421 -323
60	Widerstand	Resistor	R315,316	390K	1159.747 -323
61	Widerstand	Resistor	R327,359	5K6	1159.399 -323
62	Widerstand	Resistor	R328	82K	1159.615 -323
63	Widerstand	Resistor	R329	56K	1159.585 -323
64	Widerstand	Resistor	R331,357	10K	1159.437 -323
65	Widerstand	Resistor	R332,355	560R	1159.275 -323
66	Widerstand	Resistor	R334	10K	1061.046 -325
67	Widerstand	Resistor	R335	3K3	1159.364 -323
68	Widerstand	Resistor	R336,337	220R	1159.194 -323
69	Widerstand	Resistor	R339,341,343,345, 351,356,376	1K	1159.291 -323
70	Widerstand	Resistor	R340	22R	1159.038 -323
71	Widerstand	Resistor	R344	100K	1159.631 -323
72	Widerstand	Resistor	R353,354	47K	1159.577 -323
73	Widerstand	Resistor	R358	1K5	1159.313 -323
74	Widerstand	Resistor	R361	100R	1159.100 -323
75	Widerstand	Resistor	R366	2K7	1159.356 -323
76	Widerstand	Resistor	R371,372	47K	1159.569 -323
77	Widerstand	Resistor	R374	270K	1159.690 -323
78	Widerstand	Resistor	R375	24K	1159.518 -323
79	Widerstand	Resistor	R377	68K	1159.593 -323
80	Widerstand	Resistor	R378	120K	1159.641-323

Ersatzteile-Liste Spart Parts List

Lfd.Nr Item.No.	Benennung	Denomination	Pos.i.Schaltbild Diagram pos.	Artikel-Nr. Article No.	Best.-Nr. Part.No.
	Schaltungsplatte (nicht als Komplett-Teil lieferbar)	**P.C. board (not available completely)**	5	.. E 4010	
1	Frontwand	Front part			1157.833-285
2	Rückwand mit Antennenbuchse	Back part with antennasocket			1164.211-287
3	Masseblech (Antenne)	Chassis sheet (antenna)			1177.990-283
4	Abschirmdeckel (µP)	Screening cover (µP)			1175.815-284
5	Stiftleiste 19 polig	Pin ledge 19 poles	ST721		1158.041-277
6	Stiftleiste 12 polig	Pin ledge 12 poles	ST801		1158.716-277
7	Überspannungsableiter	Arrester	SP41	200V	1031.112-395
8	Keramikresonator	Ceramic resonator	Q385	MUR BFU	1177.559-345
9	Quarz	Quartz	Q901	12.000 MHz	1179.640-342
10	Quarz	Quartz	Q1301	4.332 MHz	1182.511-342
11	IC	IC	IC231	BAW TL082ID/IM	1172.931-308
12	IC	IC	IC291	PHI PC74HC4066D	1165.003-308
13	IC	IC	IC451	SGT TDA7310	1155.113-308
14	IC	IC	IC452,471	PHI HEF4066BT	0774.308-308
15	IC	IC	IC721,911	PHI HEF4094BT	1156.901-308
16	IC	IC	IC731	SOY CXA1102M	1050.141-308
17	IC (nur mit Spezialwerkzeug aus-lötbar. Bei Defekt gegebenenfalls Gerät ins Werk einsenden)	IC (Resoldering only with special tool. In case of defect return unit to factory)	IC901	SIE SAB80C535-N-T40/85	1060.171-308
18	IC	IC	IC902	BAW 27C512-1388	1232.320-308
19	IC-Sockel	IC-base			0655.791-267
20	IC	IC	IC903	PHI HEF40373BT S020	0588.539-308
21	IC	IC	IC904	SAY LC3564SM-10	1230.530-308
22	IC	IC	IC907	AMC 85C82I/SM	1160.567-308
23	IC	IC	IC1231	PHI LM2903D	1015.461-308
24	IC	IC	IC1232	HRS CA3140M-96	1070.762-308
25	IC	IC	IC1301	PHI SAA6579T/V1	1155.431-308
26	Drossel	Choke	D41	2.2 UH	1178.237-334
27	Drossel	Choke	D385,901,902,903	10 UH	1005.804-334
28	Diode	Diode	DI31,32,41,42,231,291, 721,901,902,903,915, 916,1232,1233,1401	BAW LL4148	0659.592-301
29	Diode	Diode	DI71	TEL BZT03D22	1010.921-301
30	Diode	Diode	DI232	PHI BAT54S	1154.699-301
31	Diode	Diode	DI911,912	BAW BAW56	1043.587-301
32	Diode	Diode	DI1231	BAW BAV70	0672.475-301
33	Transistor	Transistor	T31	BAW BC807-16	1172.913-302
34	Transistor	Transistor	T32,744,901,1232	BAW BC848B	0659.614-302
35	Transistor	Transistor	T232,385,386,387, 389,390,1231	BAW BC848C	1224.727-302
36	Transistor	Transistor	T291,451,452,741, 742,912,914,917,921, 922,1401	BAW KRC103S/ RN1403	1172.646-302
37	Transistor	Transistor	T743,911,919	BAW BC808-40	1018.280-302
38	Transistor	Transistor	T902,903,904	ITT BC848B/E6619	1215.711-302
39	Transistor	Transistor	T915,916,918,1404	BAW KRA103S/ RN2403	1172.654-302
40	Transistor	Transistor	T1402	BAW BC858C	1224.743-302
41	Transistor	Transistor	T1403,1405	BAW BC847C	1076.388-302
42	Transistor	Transistor	T1407	BAW BC807-40	1027.931-302
43	Elko	Elco	C31	220U	1173.057-312
44	Kondensator	Capacitor	C41	1N	1173.324-315
45	Kondensator	Capacitor	C231,386,465,469	10N	1119.125-315
46	Kondensator	Capacitor	C233	10P	1108.506-315
47	Elco	Elco	C234,476,490	10U	1171.984-312
48	Elco	Elco	C235,237,456,479, 702,722,1303	2U2	1173.261-312
49	Kondensator	Capacitor	C236,1304	330P	1066.102-315
50	Elko	Elco	C238,459,485,495, 1233	4U7	1173.278-312
51	Kondensator	Capacitor	C291,385,464,903-909,1232,1307,1326	100N	1113.399-315
52	Kondensator	Capacitor	C387	22N	1119.176-315
53	Kondensator	Capacitor	C388	470N	0370.851-314
54	Elko	Elco	C389	47U	1172.050-312
55	Elko	Elco	C390	22U	1172.018-312
56	Kondensator	Capacitor	C451,461,471,481	220N	0325.031-314
57	Kondensator	Capacitor	C452,453,472,473	560N	1171.402-314
58	Kondensator	Capacitor	C454,474	100N	0325.023-314
59	Kondensator	Capacitor	C455,475	220N	0348.491-314
60	Kondensator	Capacitor	C458,478	2N7	1083.945-315

Ersatzteile-Liste Spart Parts List

Lfd.Nr Item.No.	Benennung	Denomination	Pos.i.Schaltbild Diagram pos.	Artikel-Nr. Article No.	Best.-Nr. Part.No.
61	Kondensator	Capacitor	C462,482,483,486, 487,488,489,1308	47P	1066.064-315
62	Kondensator	Capacitor	C467,470	100N	0320.102-314
63	Kondensator	Capacitor	C484,926	33N	1119.192-315
64	Elko	Elco	C701,721	U68	1173.758-313
65	Elko	Elco	C702,722	U33	1017.373-313
66	Elko	Elco	C723,727,731	100U	1172.085-312
67	Kondensator	Capacitor	C901	5P6	1063.073-315
68	Kondensator	Capacitor	C902	22P	1066.031-315
69	Kondensator	Capacitor	C910 - 925,927 - 931, 934 - 947,998,999	100P	1066.072-315
70	Kondensator	Capacitor	C932	33N	1113.364-315
71	Kondensator	Capacitor	C933,1239	220N	1119.745-315
72	Kondensator	Capacitor	C948	47N	1113.372-315
73	Kondensator	Capacitor	C1231	680P	1115.571-315
74	Kondensator	Capacitor	C1234	680N	1167.979-314
75	Kondensator	Capacitor	C1235	4N7	1166.751-315
76	Kondensator	Capacitor	C1236	1N	1119.060-315
77	Kondensator	Capacitor	C1237,1401	33P	1066.056-315
78	Kondensator	Capacitor	C1306	560P	1156.561-315
79	Kondensator	Capacitor	C1309	82P	1156.527-315
80	Kondensator	Capacitor	C1334	220P	1083.848-315
81	Kondensator	Capacitor	C1405	10N	1113.321-315
82	Trimmerwiderstand	Trimmer resistor	P701,721	10K Lin	1062.557-329
83	Widerstand	Resistor	R31,32,388,395,932, 1231,1237,1238	4K7	1159.380-323
84	Widerstand	Resistor	R33,231,235,291,456, 462,725,901-903,933, 971,974,983,1309	47K	1159.577-323
85	Widerstand	Resistor	R34,55,387,397,475, 476,741,977,978,981, 997,998,999,1407, 1413,1414	10K	1159.437-323
86	Widerstand	Resistor	R35,391,480,748,963, 1232,1323,1333,1404, 1416,1418	100K	1159.631-323
87	Widerstand	Resistor	R45,72,401,601-604, 904-906,1245	0R	1018.302-323
88	Widerstand	Resistor	R71	47R	0540.031-323
89	Widerstand	Resistor	R232	100K	1008.080-323
90	Widerstand	Resistor	R233	120K	1008.099-323
91	Widerstand	Resistor	R236	470K	1008.137-323
92	Widerstand	Resistor	R237,295,457,742, 976,980	2K2	1159.348-323
93	Widerstand	Resistor	R238,744,907,908, 909,948 - 962,964, 970,987,1401,1405	22K	1159.501-323
94	Widerstand	Resistor	R239	1K2	1120.069-323
95	Widerstand	Resistor	R240,1233,1235	1K	1007.661-323
96	Widerstand	Resistor	R241,474	6K8	1159.402-323
97	Widerstand	Resistor	R242	470K	1159.755-323
98	Widerstand	Resistor	R292,386,400,731, 1301	10R	1159.011-323
99	Widerstand	Resistor	R385,389	330R	1159.224-323
100	Widerstand	Resistor	R390,972,973,984	100R	1159.100-323
101	Widerstand	Resistor	R392,1406	18K	1159.471-323
102	Widerstand	Resistor	R393,461,910 - 931, 936-939,941- 947,975, 1411	1K	1159.291-323
103	Widerstand	Resistor	R394	39K	1159.550-323
104	Widerstand	Resistor	R396,451,471	1K5	1159.313-323
105	Widerstand	Resistor	R398	15K	1159.461-323
106	Widerstand	Resistor	R399	5M6	1159.798-323
107	Widerstand	Resistor	R452,453,472,473	4K3	1023.020-323
108	Widerstand	Resistor	R721	43K	1008.013-323
109	Widerstand	Resistor	R743,979,982,1240	8K2	1159.429-323
110	Widerstand	Resistor	R745	560R	1065.432-323
111	Widerstand	Resistor	R746	68K	1159.593-323
112	Widerstand	Resistor	R747,1324	27K	1159.534-323
113	Widerstand	Resistor	R934,935,940	470R	1159.267-323
114	Widerstand	Resistor	R968	1M8	1166.506-323
115	Widerstand	Resistor	R1234	39K	1008.005-323
116	Widerstand	Resistor	R1236	12K	1007.874-323
117	Widerstand	Resistor	R1239	330K	1162.675-323

Ersatzteile-Liste Spart Parts List

Lfd.Nr Item.No.	Benennung	Denomination	Pos.i.Schaltbild Diagram pos.	Artikel-Nr. Article No.	Best.-Nr. Part.No.
118	Widerstand	Resistor	R1241	68K	1008.064-323
119	Widerstand	Resistor	R1242,1410	3K9	1162.586-323
120	Widerstand	Resistor	R1243	27K	1007.981-323
121	Widerstand	Resistor	R1244	120K	1159.641-323
122	Widerstand	Resistor	R1246	1M	1159.781-323
123	Widerstand	Resistor	R1247	12K	1159.453-323
124	Widerstand	Resistor	R1304	820R	1163.299-323
125	Widerstand	Resistor	R1408,1409,1421	330R	1011.030-323

Von uns verwendete Bauteile unterliegen einer bestimmten Spezifikation. Deshalb dürfen im Reparaturfall nur Original Ersatzteile verwendet werden, die über unsere Kundendienstorganisation unter Angabe der Bestellnummer bezogen werden können.

The components used by us are subject to a precise specification. Therefore, in case of repair only original spare parts can be used, which can be ordered at our service department under indication of the order number.